The Guide

To Professional Window Coverings

Volume XVI

Visible Light Transmission (Tv)

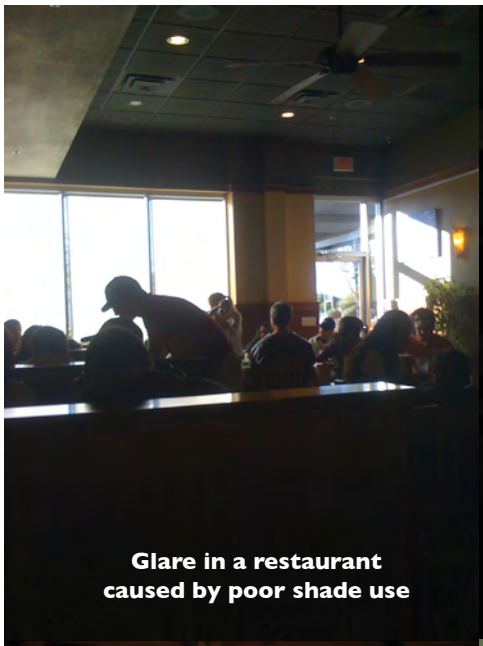

Glare in a restaurant
caused by poor shade use

Same Windows
Sun vs shade

Direct sun vs indirect

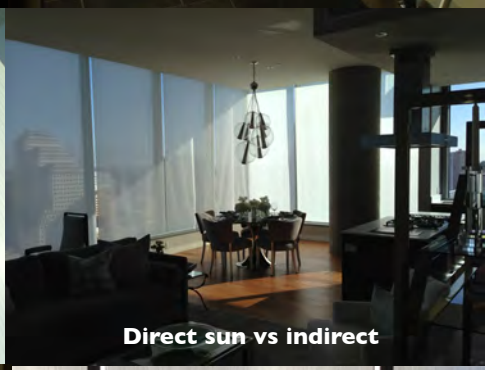

Direct sun vs indirect

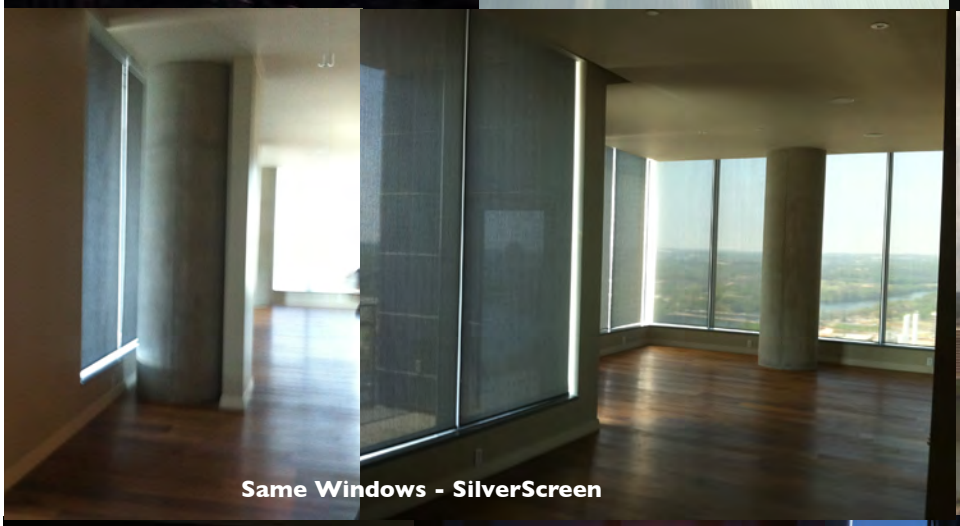

Same Windows - SilverScreen

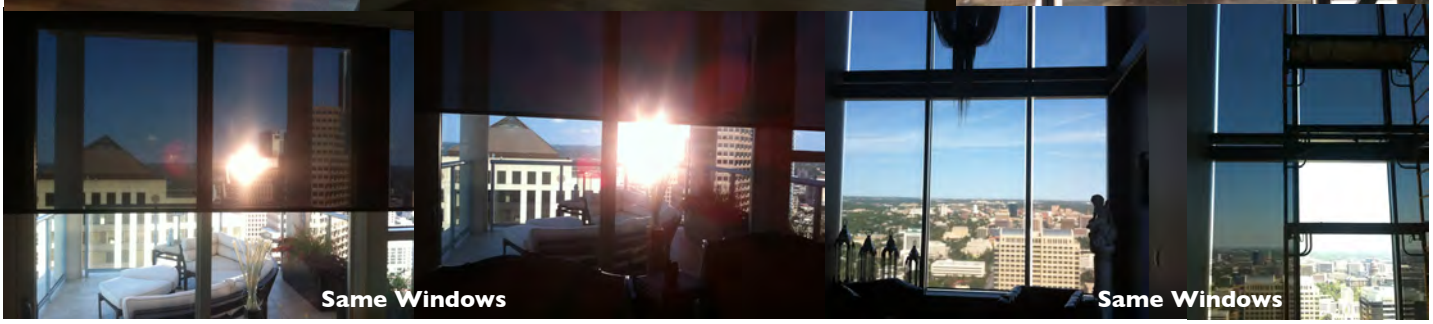

Same Windows

Same Windows

Spotlight on:

The Paramont Tilt System

We hate repairs. They are time consuming, costly, unprofitable, and in a large part, it's due to product deficiencies. On a shutter, there's nothing worse than the staple. While we have had very few problems with the nylon tilt bar connector, the perception is that plastic is worse than metal.

We've fixed these problems with our new, patent pending, Paramont® Tilt System. You're going to have to see it to truly understand how much better it is. It's expensive but we believe that by spending a little more upfront, we save significant headaches on the back end.

Lower Prices!

New Lower Prices??? Yes. We've dropped prices on several products – including Roller Shades and Motors.

New Products

Blind Supply's offering is back to being a complete one.

In this Guide you will find an all-new Roller Shade offering with new fabrics and new sample books.

You'll also find: Roman Shades, Woven Woods, Cellular Shades, Cornices, Draperies and even a little bit of drapery hardware – all items that were excluded from our last offering.

New Motors

The Savvy motor is cost effective, strong and quiet.

The Nice motor range is a strong, quiet and reliable alternative to several Somfy motors. There are great controls now and even more cool stuff coming soon.

Contents

Tradewind Shutters..... 4

Savvy Shades..... 10

Classic Cellular Shades 22

Gallery Woven Woods 28

Tableaux 33

Caswell Roman Shades 34

Caswell Custom Drapery 37

Drapery Hardware 41

Clarksville Cornices 42

Horizontals..... 48

Parts & Warranties..... 50

Just a Note:

We believe in this channel of distribution. We believe that all window coverings serve a purpose, have a valid and necessary function and that the consumer is served best by a professional that can assess needs and provide the product that best serves the intended function. The internet, just like 800 numbers of the past, cannot duplicate the service of an independent, local, window covering professional. The low cost manufacturing of whatever developing country is up next cannot match the service of an independent local manufacturer.

We want to be your partner, to win when you win, to help each other win sales and to make work fun, exciting, enjoyable and profitable.

I'm proud of our new product offering because we've addressed a few past issues (like high priced motors), missing products (like cellular and roman shades) and now offer a full line product offering with extremely competitive prices and quality.

This product offering should allow us to be the partner of yours that we want to be. If you agree, be our Ally and let's have some fun.

- Devin Hicks

Devin@blind-supply.com

Tradewind Shutters

2016 Tradewind Shutter Program Overview

	Paramont™	Universol™	Casita
Material	Basswood / Knotty Alder	Basswood / Knotty Alder	Chinese Basswood
Standard Delivery *call for current	2 Weeks 1 Week - 20%		4 Weeks
Colors	Appliance White, Extra White, Pure White, Dover White, Greek Villa, Alabaster, Downy, Snowbound, Marshmallow, Creamy, Antique White, Navajo White, Moderate White, Divine White, Pearly, Natural Choice, Panda White, Reliable White, Muslin, Nacre, Softer Tan, Functional Gray, Repose Gray, White Chip (ppg), Decorator White (ppg), Swiss Coffee (BM) + Custom Paints & Stains ($500)		Sherwin Williams: Extra White, Pure White, Dover
Stiles	2" or 3" Beaded or Flat (2" Beaded is Standard)	2" Beaded	2" Beaded
Louvers	Elliptical 3½" & 4½" (2½" $5 / Sqft)	Elliptical 2½, 3½" & 4½", Roman 3½" & 4½" ($5 / Sqft includes Hidden Tilt)	Flat 3½"
Front Tilt Louver Connector	Paramont® Tilt System	Staples	Staples
Tiltbar	Center, Side (front or back)	Center, Hidden ($3.75 / Sqft)	Center Only
Louver Spacing	Variable	Variable on Front Tilt Fixed on Hidden Tilt	Fixed
Frame Options	50+ Frame Combination Choices & Custom Frames		Square L, "Alder" Z & Deco Frame
Double Hung	20% Surcharge		Not Available
Hinge Finish	White, Off-White, Bright Brass, Antique Brass, Chrome (Nickel), Oil Rubbed Bronze		White, Off-White, Oil Rubbed Bronze
Bi-Fold Panels	Max width is 52"		Max width is 46"
Min Panel Width	6"		
Max Panel Width	Recommended 42"		Recommended 36"
Max Panel Height	120" >72" Divider Rail Recommended		120" >68" Divider Rail Recommended
Specialties	French Door $375 By-Pass on Track $625 Contoured Arch $312 per Panel		French Door $375 By-Pass on Track $625 Arch $350/Panel
Suggested Retail	$37.65 /sq ft Paint $42.35 /sq ft Stain $47.06 /sq ft Stained Alder	$32.94 /sq ft Paint $37.64 /sq ft Stain $42.35 /sq ft Stained Alder	$28.23 /sq ft
1 Year Full Warranty	√	√	√
Louver Connector Warranty	Lifetime	2 years	1 year
Extended Limited Warranty	Lifetime		N/A

Divider Rails

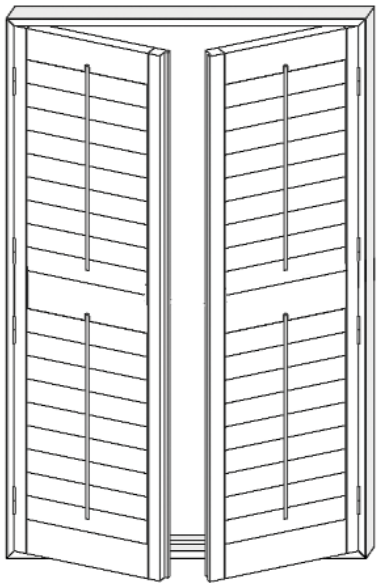

A divider rail is suggested on panels over 72" in height.

Variable Louver Spacing - Variable louver spacing allows for precise divider rail placement. Hidden Tilt - If ordering a hidden tilt shutter, we cannot guarantee divider rail location. The exact location may vary by up to +/- 2.25" on 4.5" louvers or +/- 1.5" on 3.5" louvered shutters.

IM - If providing window opening measurement, indicate distance from bottom of the window opening to the center of divider rail. OM - If providing frame-to-frame measurement, indicate distance from bottom of frame to center of divider rail.

Tilt Zone Option: An alternative to a divider rail is split tilt bars to create separate tilt zones. Specify the aproximate break location.

Paramont Tilt

The Paramont Tilt System is a patent pending aperatus that removes the staple completely from a shutter. The louver link is threaded 3/4" into the louver. The louvers are connected by a Stainless Steel rod that is wrapped in an exclusively shaped tilt rod.

French Door Cutout

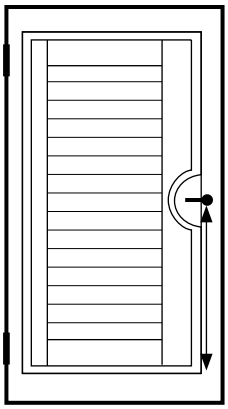

Indicate on order form door handle cutout location - side & height. Cutout is always opposite of the hinge and the shutter hinges on the same side as the door.

Surcharge Option Add $375

*Provide height from bottom of **shutter frame** to center of knob.*

Tilt Rod Location

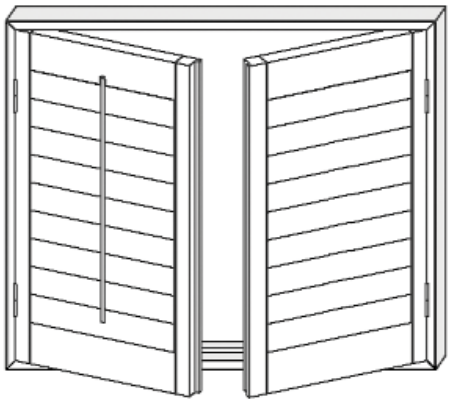

Overhead Track

Our standard boxout frames, tracks, and hardware will automatically be provided. Please specify if NOT required. Standard ByPass has 7" header projection and panels bypass with louvers open. Both Bi-Fold and ByPass are surcharge options - Add $625

Bi-Fold On Track (BF)

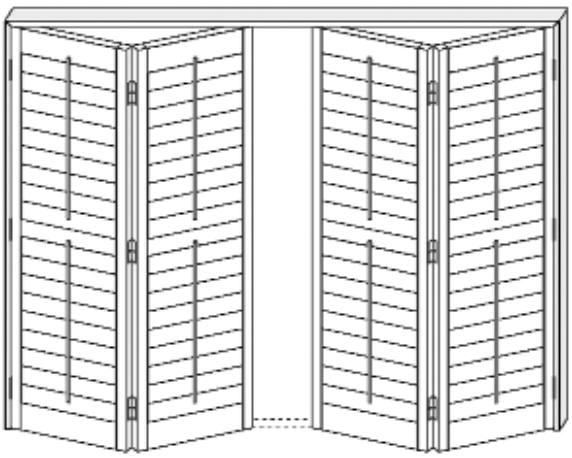

ByPass On Track (BP) aka "Slider"

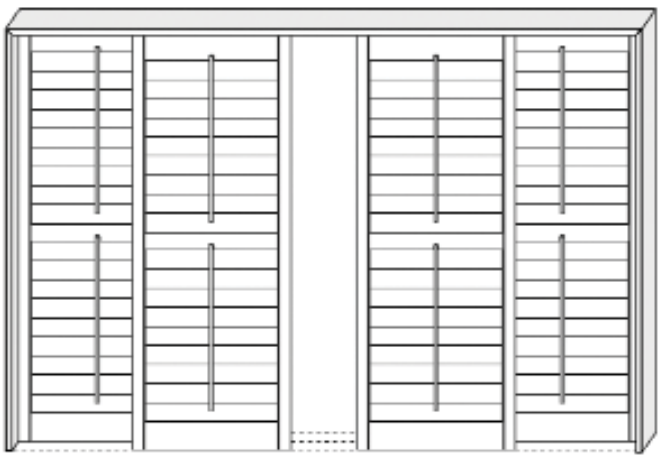

Double Hung Panels

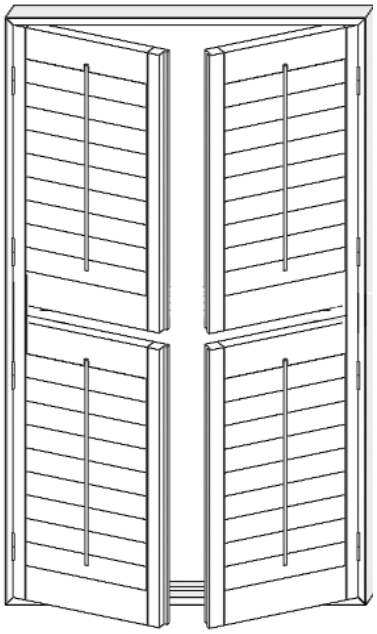

When ordering double hung panels remember that TOTAL number of panels includes both rows in the window opening. Provide panel configuration for only one row.

20% Surcharge

Hinge Colors

Standard Hinge Colors (Right to Left)
Oil Rubbed Bronze (ORB)
White (W)
Off White (OW)
Chrome (C)
Antique Brass (AB)
Bright Brass (BB)
Brushed Nickel (BN)

Frame Sides

No Frame/
Direct Hinge - (DH)

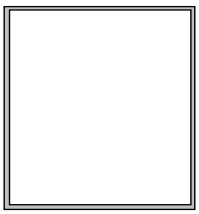

2-Sided = (2 frame)

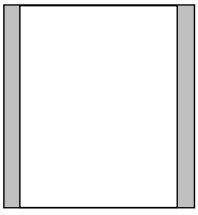

2-Sided on sill = (2s)

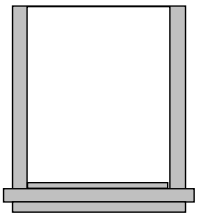

2-Sided with
2 sills = (2x2s)

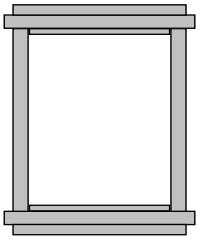

3-Sided on sill = (3s)
** Most Common **

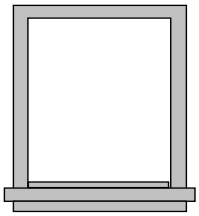

3-Sided = (3 frame)

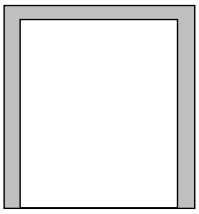

3-Sided Inverted = (3I cafe)

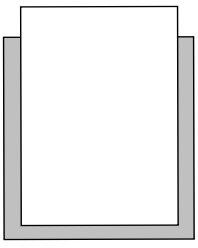

4-Sided = (4 frame)

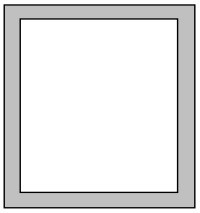

Panel Configuration

Start from the left side of the window opening. Write "L" for panel hinging on the left side and "R" for panel hinging right side. If there is a "T-Post" write "T" after panel fold letter according to the location of the T-post. Other configurations are available but below are illustrations of "standard" options. If another configuration is required, please do not hesitate to place the order.
Considerations: T-posts are difficult with Direct Hinge - but it's still possible. Tri-folding panels fold funny and aren't recommended.

● *Dots indicate hinge location on panel* ┳ *T-s indicate a T-post* □ *Square indicates frame*

One Panel System

Individually Hinged

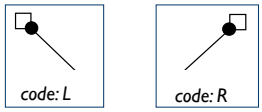

Two Panel System

Individually Hinged *Bi-Fold*

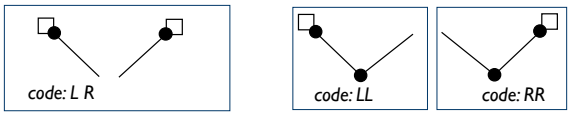

Three Panel System

Individually Hinged *Bi-Fold*

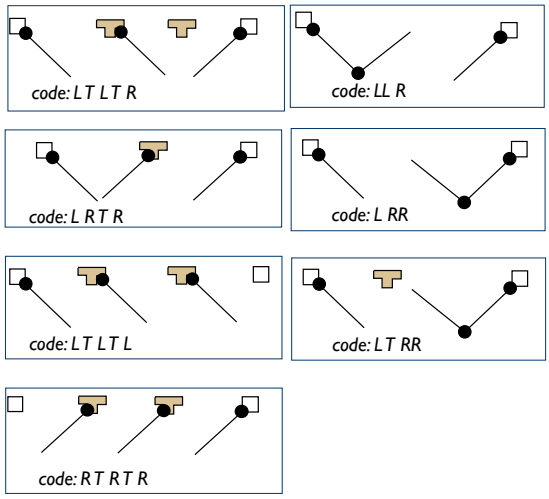

Four Panel System

Individually Hinged *Bi-Fold*

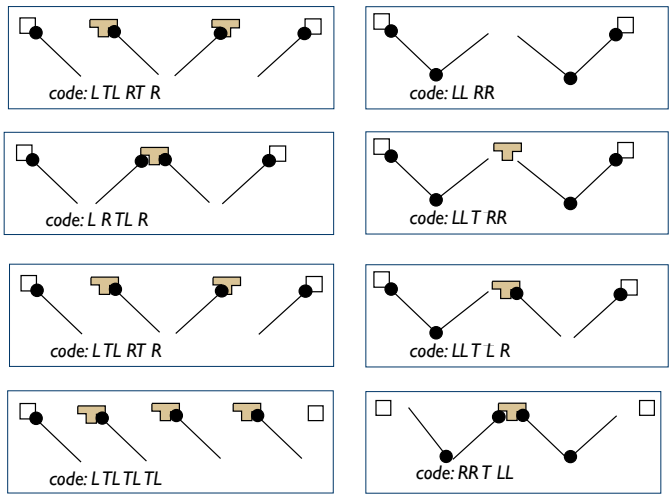

Six Panel System

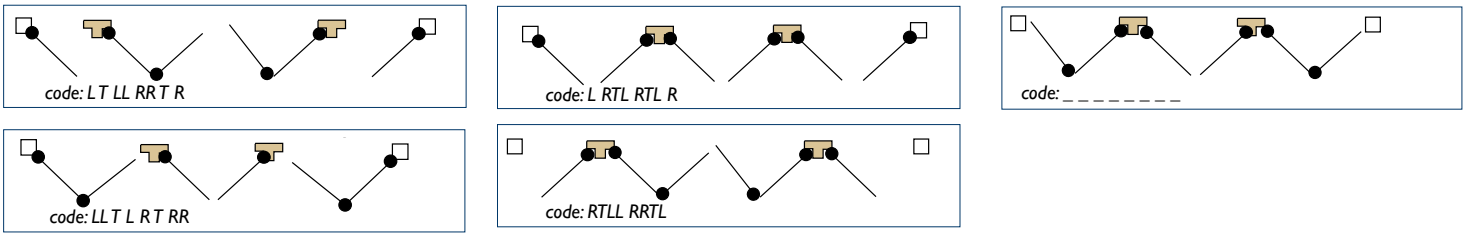

T-Posts

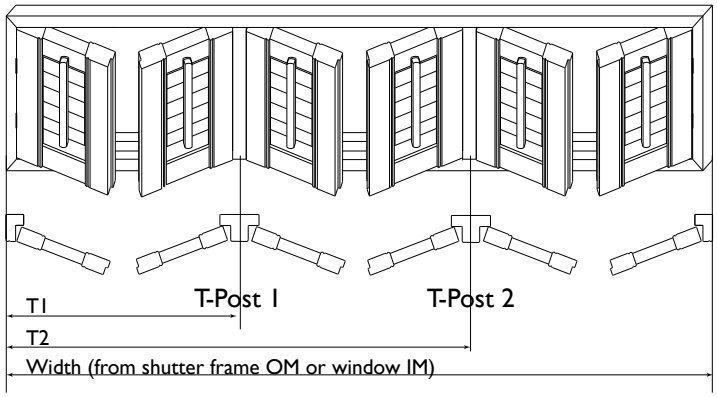

If T-post is to be centered..
Write "C" on the order form.

T-post not centered...

If providing window opening measurement, please indicate the distance from the left side of window opening to the center of the T-post.

If providing frame-to-frame measurement, indicate distance from left side of frame to center of T-post.

PARAMONT® & UNIVERSOL® FRAMES

Z Frames - "Standard custom" Choose the body and face

Option 1 - Frame Body

Small Body

Standard Body

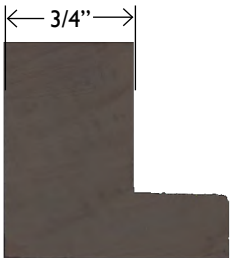

Option 2 - Frame Face

GALLERY Z FACE

Alder Z Face

Classy Z Face

Bubble Z Face

Step Z Face

Large Z Face

Another Decorative Z

Bump Z

Blocked Z

Adjustable Overlap Frames

Z-3/8 Face
Standard overlap - 3/8"

Beaded Z Face
Standard overlap - 7/8"

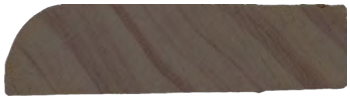

Standard Z Face
Standard overlap - 1"

Z-3/8 Square Face
Standard overlap - 3/8"

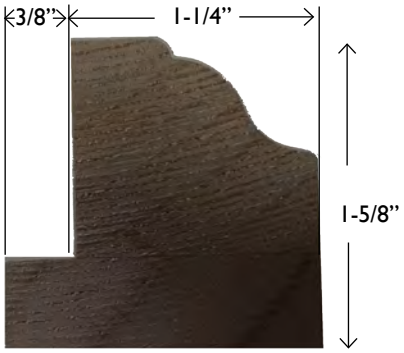

NEW Small Deco

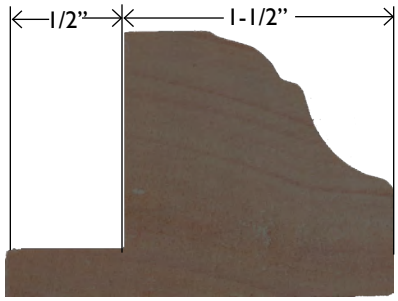

Old Small Deco (+10%)

Hang Strip

Squared L

Bullnose L

Mid Length L

Square Extended L
(+10%)

IM Notched L

T-Post & Sill Frames

Sill Frame

Sill Frame with SillCap

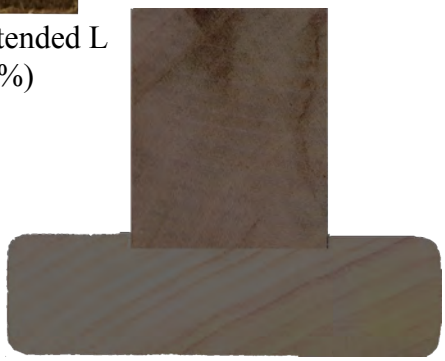

T-Post

Casita Frames

Casita Z

NEW Small Deco

Squared L

Savvy Shades

Shade System Collection

	DJTX	SunProject				RollEase			Acmeda	Corradi		
	Open Shade	Deko S70	Deko OR45	Deko OR55	Moduline	Skyline OR	Skyline Square Fascia	Skyline Round Cassette	ACM60	SL111	Aero	Horizon
Recommended For:	Residential	High End Residential or Office	High End Residential or Office	Large open roll shades	Large shades and Office	Residential	Residential or Office	Residential	Commercial Large Windows	Exterior	Exterior - Open Roll and Large	Push/Pull - Skylights or Specialty
Interior/ Exterior	Interior	Interior	Interior	Interior	Interior	Interior or Exterior	Interior	Interior	Interior	Interior or Exterior	Interior or Exterior	Interior or Exterior
Fascia	Rounded Cassette	Square Cassette	No Fascia - headrail only	No Fascia - headrail only	Square Fascia with Back plate	None	Square Fascia	Rounded Cassette	Optional fascia (20%) L or I shape	Rounded	None	Rounded
Fascia Size	3.75"	3"	NA	NA	4.125"	NA	3", 4" or 5"	3.15" or 4.75"	4.5"		N/A	
Fascia / Headrail Colors	White, Ivory, Black, Fabric inserted	Anodized Aluminum, White and Custom Paint (20%)	Anodized Aluminum	Anodized Aluminum	Anodized Aluminum	N/A	White, Off White, Bronze and Anodized Aluminum	Fabric Wrapped	Custom Paint Only	Bronze, Desert Sand, White	N/A	Bronze, Desert Sand, White
Clutch	Shifter Clutch	Lite-Lift	Lite-Lift	Lite-Lift	Lite-Lift	RollEase Skyline - SL5, SL10, SL15, SL20, Galaxy ($20) or Spring Tension			Motorization Recommended	Crank	Crank	Motor Only
Spring Assist	N/A	Standard				Option ($50)			Option ($100)	N/A	N/A	N/A
Clutch Color	White, Ivory or Black	Grey				Color Coordinated White or Black Bronze and Ivory N/C by Request Chrome, Satin Nickel and Bronze ($25)			White	N/A	N/A	N/A
Chain	Nickel Plated Steel, Plastic or Stainless ($25/shade)								NA	NA	NA	N/A
Chain Colors	Steel - Chrome/Nickel, White, Black, Oil Rubbed Bronze. Plastic - White, Off White, Black, Grey								NA	NA	NA	N/A
Bracket Type	Mid Mounted C-Clip	Mid Mounted	Mid Mounted Swivel Style	Mid Mounted	Mid Mounted	End Mounted	End Mounted Square	Mid Mounted	End Mounted	Mid Mounted	End Mounted	Mid Mounted
Roll Types	Standard Only	Standard or Reverse	Standard or Reverse	Standard or Reverse	Standard Only	Standard or Reverse	Standard Only	Standard Only	Standard or Reverse	Standard Only	Standard or Reverse	Standard Only
Banding	N/A	N/A	N/A	N/A	Price as Individual and add 10%	Price as Individual and add 20%	N/A	N/A	Price as Individual and add 10%	N/A	N/A	N/A
Bottom Bars	Shifter Only	Welded, External Aluminum or Fabric Wrapped External(10%)								Round for Cables, Square for ShyZip		Horizon
Side Channels	N/A	Available	Available	Available	Available	Available	Available	Available	Available	Available	Available	Standard
Motorization	N/A	Low Voltage Only	Low Voltage Only	Low Voltage or 110 Volt	Low Voltage or 110 Volt	Low Voltage Only	Low Voltage Only	Low Voltage Only	110 Volt Only	110 Volt Only	110 Volt Only	110 Volt Only
Day Night / Top Down	N/A	D/N - Price as 2 Shades TD - 40%	D/N - Price as 2 Shades TD - 40%	N/A	N/A	N/A	N/A	N/A	N/A	N/A	N/A	N/A
Dual Shades	N/A	N/A	N/A	N/A	Contract Only	Available - see options	Available with 5" fascia only	N/A	Available - Quote by request	N/A	N/A	N/A
Max Sys. Width	Fabric Dependent	144" Rec.	144" Rec.	180" Rec.	180" Rec.	144" Rec.	192" Absolute	192" Absolute	276"	276"	276"	N/A
Min Width	Chain - 8", Spring Tension 18", ST30 - 18", Altus 50 - 24" ST50 - 33", SavvyMotor 27.5"									18"	18"	18"
Max Length	80"-96" w/ Shifter	72"-132"	72"-132"	120"-180"	120"-180"	72"-180"	3"-72-132" 4"-160"	72"-132"	N/A	276" Track N/A Cable	276" Track N/A Cable	276" Track N/A Cable

RollEase Skyline Open Roll

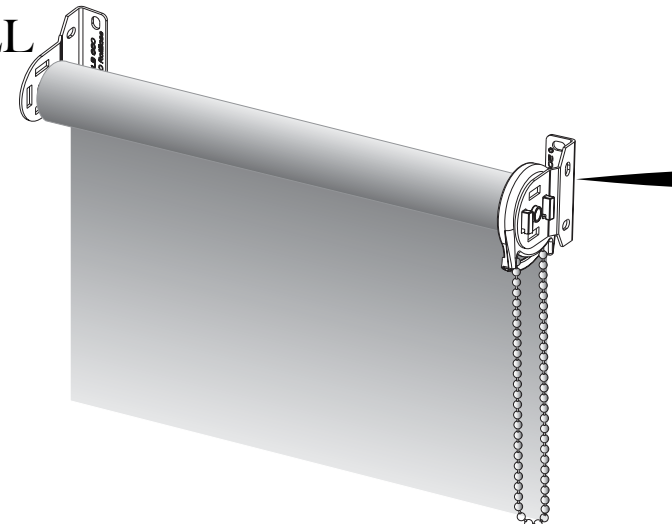

DEDUCTIONS

	Product Dimensions	
Ordered as:	Tip to Tip	Fabric Width
Inside Mount	-1/4	-1 1/8
Outside Mount	0	-7/8
Fabric Width	+7/8	0

* Large shades may require additional 3/16" fabric deduction

Skyline Open Roll Dual Shades

Price as two individual shades

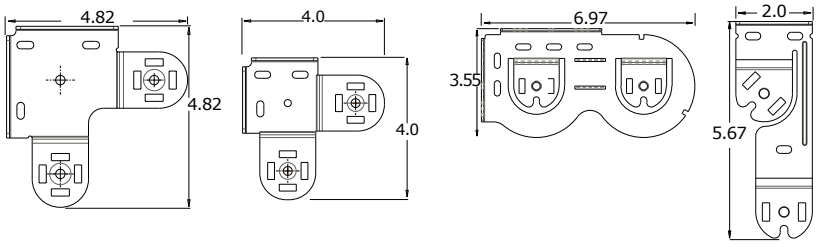

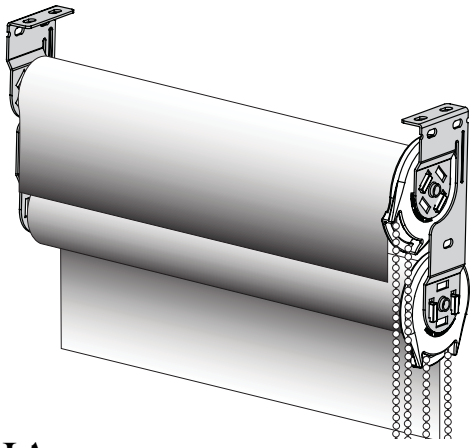

RollEase Skyline Square Fascia

DEDUCTIONS

	Product Dimensions	
Ordered as:	Tip to Tip	Fabric Width
Inside Mount	-1/4	-1 1/8
Outside Mount	0	-7/8
Fabric Width	+7/8	0

* Large shades may require additional 3/16" fabric deduction

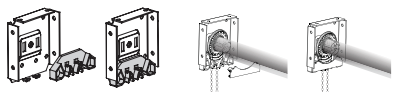

5" Fascia

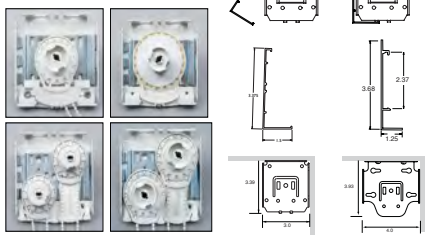

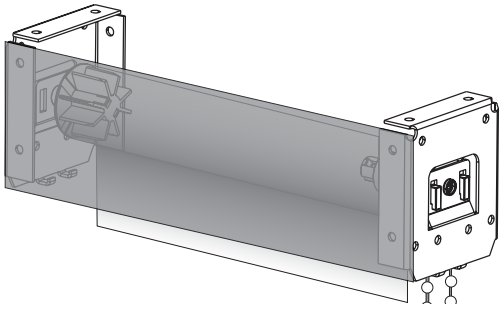

RollEase Skyline Round Cassette

DEDUCTIONS

	Product Dimensions	
Ordered as:	Tip to Tip	Fabric Width
Inside Mount	-1/4	-1 1/8
Outside Mount	0	-7/8
Fabric Width	+7/8	0

* Large shades may require additional 3/16" fabric deduction

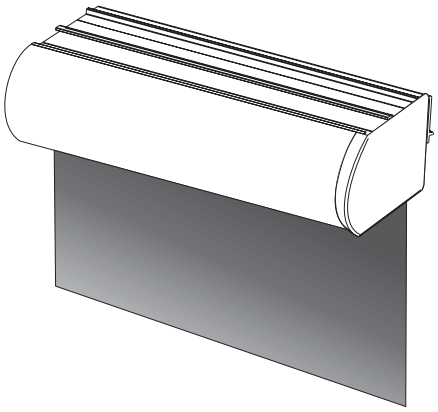

RollEase Easy Spring (Spring Tension)

DEDUCTIONS

	Product Dimensions	
Ordered as:	Tip to Tip	Fabric Width
Inside Mount	-1/4	-1 1/8
Outside Mount	0	-7/8
Fabric Width	+7/8	0

* Large shades may require additional 3/16” fabric deduction

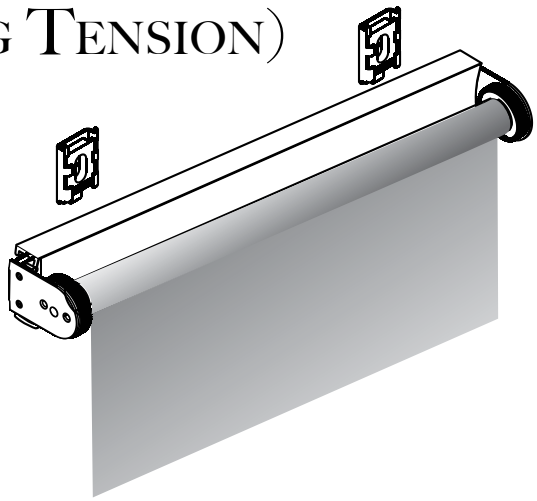

Open Shade

DEDUCTIONS

	Product Dimensions	
Ordered as:	Tip to Tip	Fabric Width
Inside Mount	-1/4	-1 1/8
Outside Mount	0	-7/8
Fabric Width	+7/8	0

* Large shades may require additional 3/16” fabric deduction

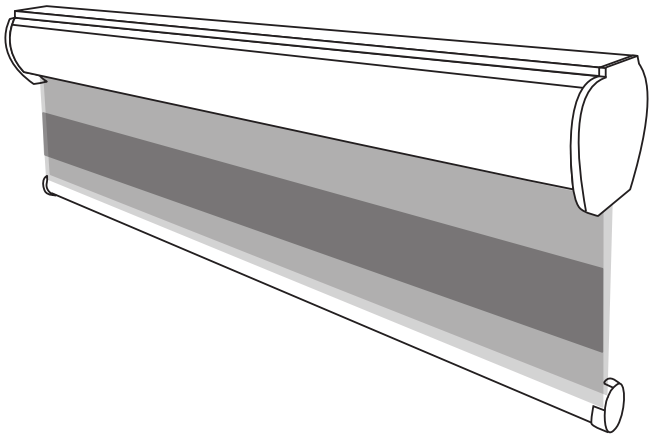

SunProject Deko S70

DEDUCTIONS

	Product Dimensions	
Ordered as:	Tip to Tip	Fabric Width
Inside Mount	-1/4	-1 11/16
Outside Mount	0	-1 7/16
Fabric Width	+1 7/16	0

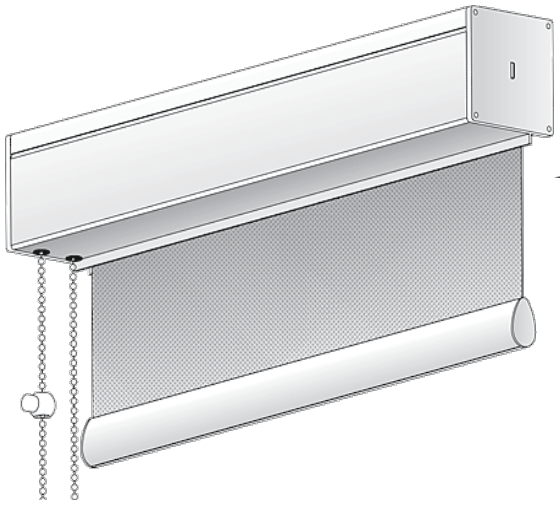

SunProject Moduline 105

DEDUCTIONS

	Product Dimensions	
Ordered as:	Tip to Tip	Fabric Width
Inside Mount	-1/4	-1 7/8
Outside Mount	0	-1 5/8
Fabric Width	+1 5/8	0

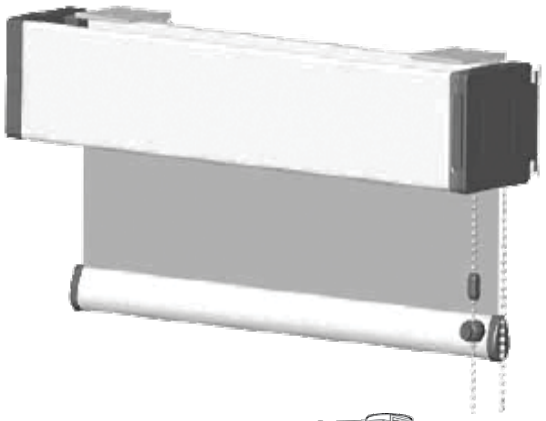

SunProject Deko OR45

DEDUCTIONS

	Product Dimensions	
Ordered as:	Tip to Tip	Fabric Width
Inside Mount	-1/4	-1 5/8
Outside Mount	0	-1 3/8
Fabric Width	+1 3/8	0

* Large shades may require additional 1/4" fabric deduction

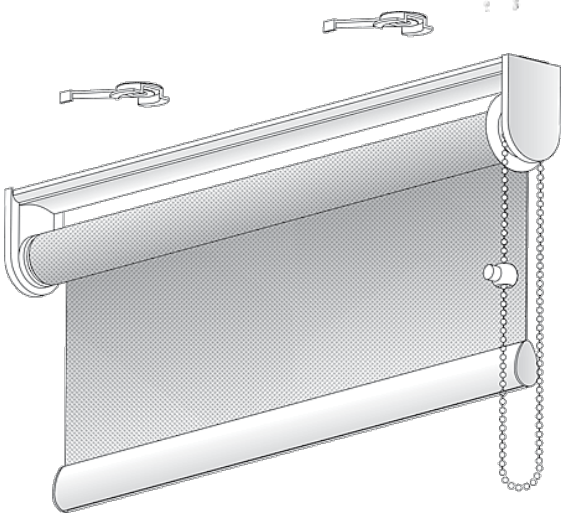

SunProject OR55

DEDUCTIONS

	Product Dimensions	
Ordered as:	Tip to Tip	Fabric Width
Inside Mount	-1/4	-1 7/8
Outside Mount	0	-1 5/8
Fabric Width	+1 5/8	0

* Large shades may require additional 1/8" fabric deduction

Acmeda ACM60

DEDUCTIONS

	Product Dimensions	
Ordered as:	Tip to Tip	Fabric Width
Inside Mount	-1/4	-2
Outside Mount	0	-1 3/4
Fabric Width	+1 3/4	0

* Motorized deductions shown, less deduction is required on manual shades

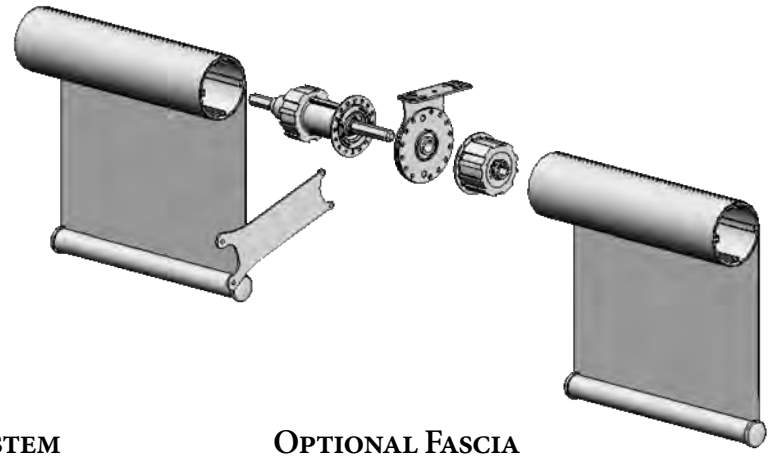

Adjustable Intermediate Bracket System

Price as individual shades and add 10%

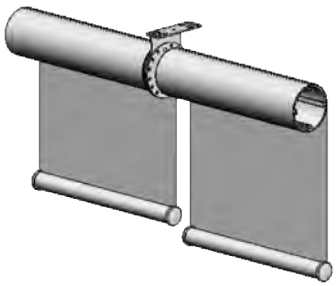

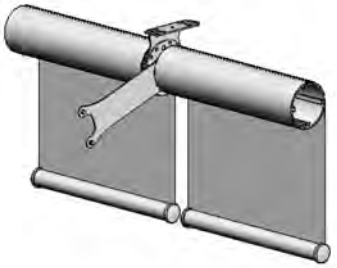

Optional Fascia

Width Based Surcharge - Custom paints only

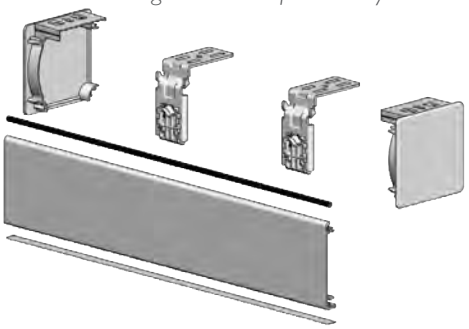

Corradi SLiii

DEDUCTIONS

	Product Dimensions	
Ordered as:	Tip to Tip	Fabric Width
Inside Mount	-1/4	-3
Outside Mount	0	-2 3/4
Fabric Width	+2 3/4	0

* Will vary based on options

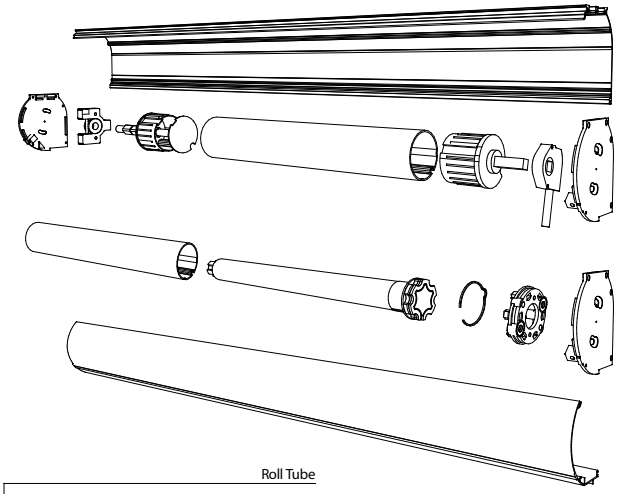

Corradi Aero

DEDUCTIONS

	Product Dimensions	
Ordered as:	Tip to Tip	Fabric Width
Inside Mount	-1/4	-3
Outside Mount	0	-2 3/4
Fabric Width	+2 3/4	0

* Will vary based on options

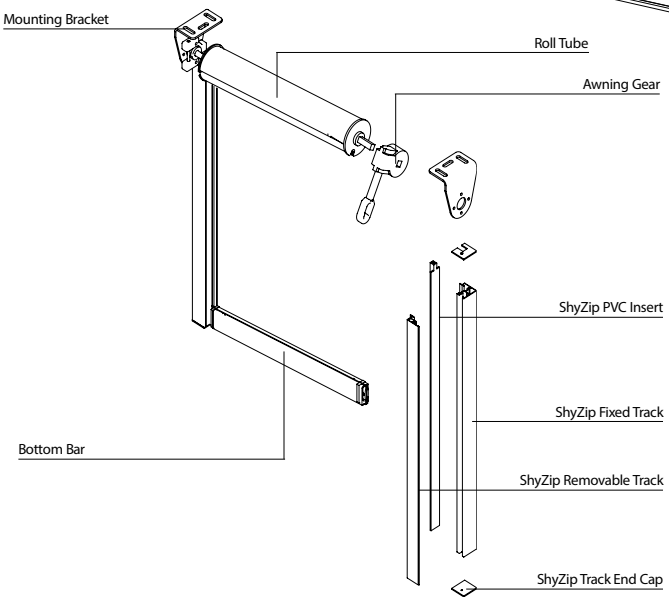

Options

Roll Options

Standard Roll
The shade material rolls off the roller towards the window so the roll is exposed to the room.

Reverse Roll
The shade material rolls off the roller towards the room so the roll is covered and on the window side.

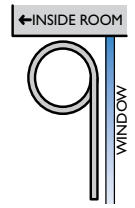

Standard Roll

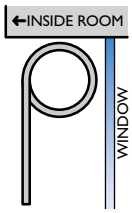

Reverse Roll

Wood Bottom Bars

Decorative wood bottom bars are custom painted or stained to your specifications. Wood bttom bars price at $30/foot

Bottom Up Roller Shades

Bottom Up Roller Shades require either Deko S70 or Deko OR45 and will have a cassette/tube at both the top and bottom.
Price at 25% Surcharge to the appropriate price grid.

Roman Shades

Almost all roller shade fabrics can be used to make custom roman shades for a more decorative look. Avoid excessively thick or knotty fabrics. Flat and Hobbled are available. Standard fold size is 7".
Flat Roman shades price at Deko S70 price plus 20%.
Hobbled Roman shades price at Deko S70 price plus 40%.
A retractable liner available for an additional 40%

Side Channels

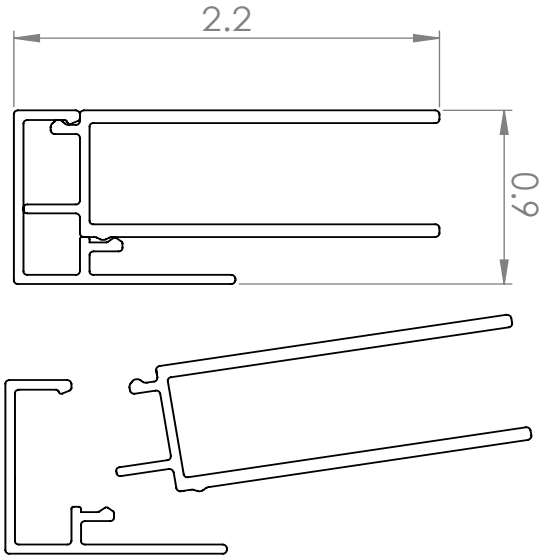

Savvy Shade Fabrics by the Yard

	Width	Price Per Ln/ Yd	Lamp Shade	17" Cushions	Bed Runner Single / Double / King			Table Runner 12.5x71 /12.5x90.5	
Botanica	88.5	109	195	100	295	375	415	195	255
Chenille	83	122	195	100	295	375	415	195	255
Collina	88.5	112	195	100	295	375	415	195	255
Marrakesh	86	58	195	100	295	375	415	195	255
Montana	92	122	195	100	295	375	415	195	255
Open Linen	84	70	n/a	n/a	n/a	n/a	n/a	n/a	n/a
Papillon	86	96	195	100	295	375	415	195	255
Regency Stripe	86	77	148	78	155	190	225	115	145
Sheer	84	46	n/a	n/a	n/a	n/a	n/a	n/a	n/a
Shot Silk	88	77	148	78	155	190	225	115	145
Taffeta	86	73	148	78	155	190	225	115	145

Panel Tracks

Panel tracks are sliding panels of our Roller Shade Fabrics.
Price at 25% surcharge to Deko S70 (Grid) pricing.
Price includes coordinated valance.
 # Panels possible at given width:

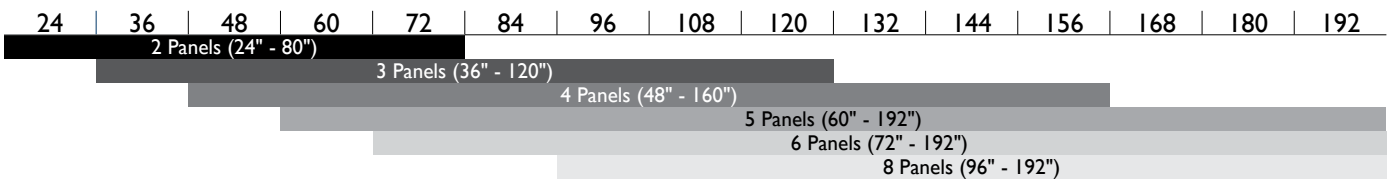

Dimensions

RollEase

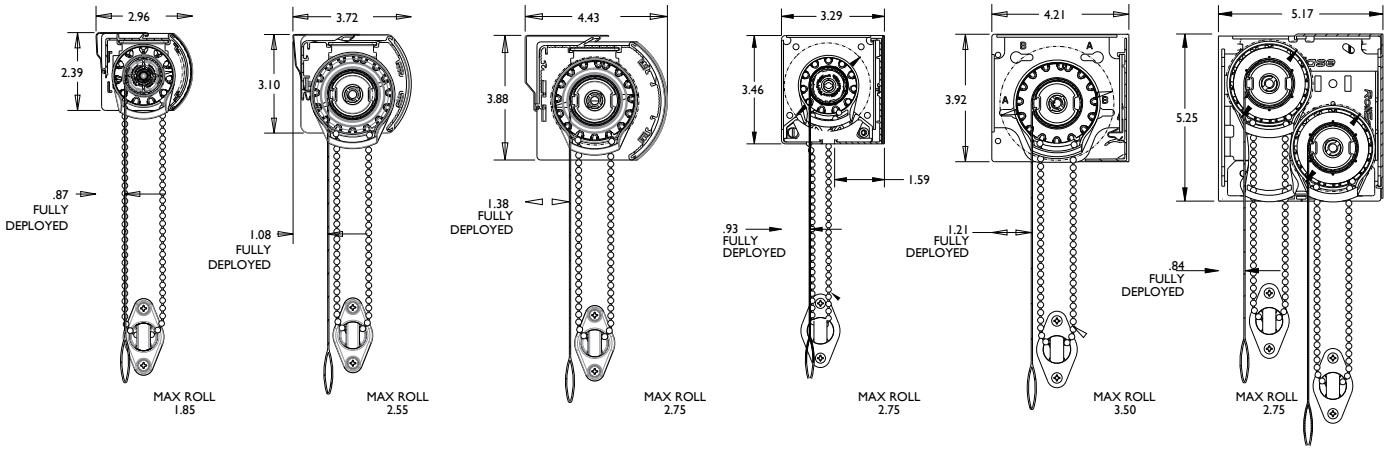

Skyline Cassette - Small | Skyline Cassette - Medium | Skyline Cassette - Large | Skyline Square Fascia - 3" | Skyline Square Fascia - 4" | Skyline Square Fascia - 5"

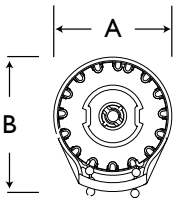

	A	B
SL5	1.5	1.75
SL10	2	2.375
SL15	2.25	2.625
SL20	2.625	3.125
Galaxy	2.625	3
Galaxy 30	3.625	4.25

	C	D
Short	2	1.5
Standard	2.375	1.5
Extended	2.875	1.5

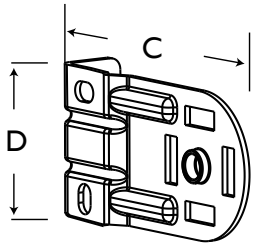

SunProject

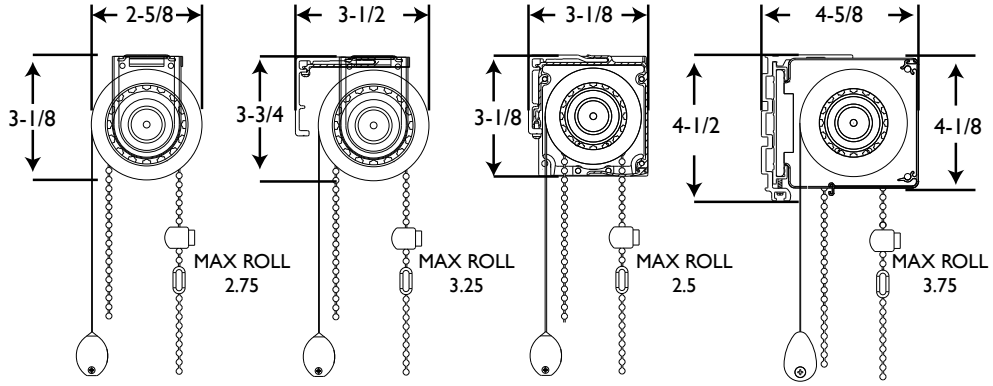

Deko OR45 | Deko OR55 | Deko S70 | MDL105

Acmeda

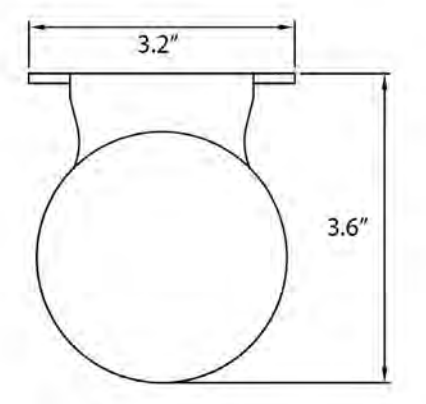

Corradi SL111

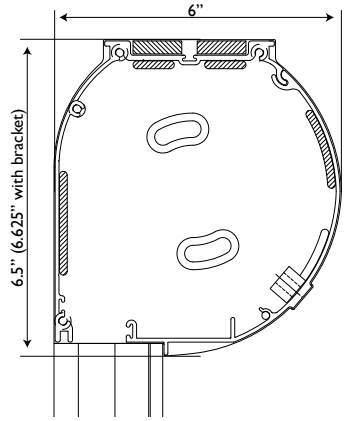

Fabric Collections

Style	Sample	Width	Fabric Group
A Screen 14%	3G Mermet	98	2
Avila Twilight	3G Mermet	110	4
Chroma	3G Mermet	94.5	4
Deco 3%	3G Mermet	98	3
Deco 5%	3G Mermet	98	3
E-Screen 1%	3G Mermet	122	3
E-Screen 10%	3G Mermet	122	3
E-Screen 3%	3G Mermet	122	2
E-Screen 5%	3G Mermet	122	2
Edessa Twilight	3G Mermet	118	1
Edessa Twilight FR	3G Mermet	118	3
Flocke	3G Mermet	94.5	6
GreenScreen Revive 5%	3G Mermet	118	3
GreenScreen Reflect 5%	3G Mermet	94.5	5
M-Screen 3%	3G Mermet	122	3
M-Screen 5%	3G Mermet	122	2
Natte 12%	3G Mermet	98	3
R-Screen 5%	3G Mermet	98	1
S-Screen	3G Mermet	122	3
Satine 5%	3G Mermet	98	4
T Screen 3%	3G Mermet	98	3
T-Screen Deco 3%	3G Mermet	122	3
T-Screen Deco 5%	3G Mermet	122	3
T-Screen Naturals 3%	3G Mermet	122	3
T-Screen Naturals 5%	3G Mermet	122	3
Vela 3%	3G Mermet	118	3
Vienne 10%	3G Mermet	98	1
Vizela 1%	3G Mermet	94.5	4
SilverScreen 2%	3G Mermet	94.5	5
SilverScreen 4%	3G Mermet	94.5	5
Almeria	Almedahls	78.7	3
Anzio	Almedahls	92.5	3
Avesta	Almedahls	80.7	3
Bali	Almedahls	78.7	3
Balsta	Almedahls	78.7	3
Bergen	Almedahls	78.7	3
Bergoma	Almedahls	86.6	3
Chambray	Almedahls	78.7	3
Chenille	Almedahls	78.7	3
Falun	Almedahls	78.7	3
Gela	Almedahls	78.7	3
Genoa	Almedahls	78.7	3
Karis	Almedahls	78.7	3
Karuna	Almedahls	78.7	3
Leaf	Almedahls	92.5	2
Linz	Almedahls	78.7	3
Madrid	Almedahls	78.7	3
Mandal	Almedahls	78.7	3
Marbella	Almedahls	78.7	3
McConor	Almedahls	78.7	3
Milano	Almedahls	78.7	3
Nora	Almedahls	78.7	3
Palama	Almedahls	78.7	3
Palencia	Almedahls	78.7	3
Palermo	Almedahls	78.7	3
Reykjavik	Almedahls	78.7	3
Romana	Almedahls	78.7	3
Santiago	Almedahls	78.7	3
Seville	Almedahls	78.7	3
Siena	Almedahls	78.7	3
Soria	Almedahls	78.7	3
Stickan	Almedahls	78.7	3
Stitch	Almedahls	78.7	3
Tarifa	Almedahls	78.7	3
Torino	Almedahls	78.7	3
Trento	Almedahls	78.7	3
Verona	Almedahls	78.7	3
Vigo	Almedahls	78.7	3
Villach	Almedahls	78.7	3
Lumiere	Not Sampled	118	3
Lylith	Not Sampled	110	5
Macau	Not Sampled	94	3
Majestic	Not Sampled	118	3
Malacca	Not Sampled	94	3
Mode	Not Sampled	78.7	4
Moon	Not Sampled	96.5	4
NordicScreen Plus BW 10%	Not Sampled	118	1
NordicScreen Plus BW 3%	Not Sampled	118	2
NordicScreen Plus BW 5%	Not Sampled	118	1
NordicScreen Plus Milan 5%	Not Sampled	118	2
NordicScreen Plus Twill 1%	Not Sampled	118	2
NordicScreen Plus Twill 3%	Not Sampled	118	2
Oslo	Not Sampled	110	1
Palister	Not Sampled	96.5	5
Regal	Not Sampled	118	1
Satin	Not Sampled	76.7	3
Scala	Not Sampled	110	1
Tabri	Not Sampled	118	5
Tenley	Not Sampled	98	1
Tenley Blackout	Not Sampled	98	1
Tinsel	Not Sampled	106	2
Venice	Not Sampled	110	2
SW1000	Phifer Sheerweave	84	1
SW2000	Phifer Sheerweave	126	3
SW2100	Phifer Sheerweave	96	3
SW2360	Phifer Sheerweave	98	3
SW2390	Phifer Sheerweave	126	3
SW2410	Phifer Sheerweave	126	3
SW2500	Phifer Sheerweave	126	5
SW2701	Phifer Sheerweave	126	3
SW2703	Phifer Sheerweave	126	3
SW2705	Phifer Sheerweave	126	3
SW2710	Phifer Sheerweave	98	3
SW3000	Phifer Sheerweave	96	2
SW4000	Phifer Sheerweave	126	3
SW4100	Phifer Sheerweave	98	3
SW4400	Phifer Sheerweave	126	3
SW4500	Phifer Sheerweave	126	2
SW4550	Phifer Sheerweave	98	3
SW4600	Phifer Sheerweave	98	4
SW4650	Phifer Sheerweave	96	4
SW4800	Phifer Sheerweave	94	5
SW5000	Phifer Sheerweave	96	4
SW7000	Phifer Sheerweave	118	5
SW7500	Phifer Sheerweave	118	3
SW4901	Phifer Sheerweave	98	4
SW4903	Phifer Sheerweave	98	3
SW2390+	Phifer Sheerweave	96	6
SW2410+	Phifer Sheerweave	94	6
SW2500+	Phifer Sheerweave	94	7
Basic 3%	Phifer Sheerweave	98	3
Basic 5%	Phifer Sheerweave	98	3
Suntex 80	Phifer Sheerweave	96	4
Suntex 90	Phifer Sheerweave	96	4
SuperSolar	Phifer Sheerweave	84	4
TuffScreen	Phifer Sheerweave	120	3
Avant Garde	ST	72	2
Baroque	ST	72	2
Couture	ST	72	2
Dark30	ST	110	OS2
DeJour	ST	72	2
Elegance	ST	110	OS1
Luxe	ST	72	2
Naturals	ST	110	OS1
OpenRoman	ST	102	OS2
Platinum	ST	102	3
Reflections	ST	102	OS2
TiltShade	ST	102	OS2
Tres Chic	ST	86.5	2
Bali	Savvy Textiles	86.5	5
Banbury	Savvy Textiles	86	4
Basix	Savvy Textiles	80	1
Basix Blackout	Savvy Textiles	80	4
Beep Beep	Savvy Textiles	78	5
Belize	Savvy Textiles	79	3
Blossom	Savvy Textiles	78	7
Botanica	Savvy Textiles	80	7
Carnival	Savvy Textiles	80	4
Chatsworth	Savvy Textiles	78	4
Collina	Savvy Textiles	80	7
Dahlia	Savvy Textiles	80	7
Fairytale	Savvy Textiles	78	5
Flutter	Savvy Textiles	80	2
G-raff	Savvy Textiles	78	4
Harmony	Savvy Textiles	78	3
Harmony Blackout	Savvy Textiles	98	4
Helsinki	Savvy Textiles	118	4
Kendo	Savvy Textiles	94	5
Linen	Savvy Textiles	72	4
Louvoscreen 3%	Savvy Textiles	98	4
Louvoscreen 5%	Savvy Textiles	98	4
Maine	Savvy Textiles	110	5
Marrakesh	Savvy Textiles	80	7
Montana	Savvy Textiles	88.5	6
Night Tide	Savvy Textiles	118	4
Open Linen	Savvy Textiles	82	4
Oslo	Savvy Textiles	118	3
Papillon	Savvy Textiles	80	6
Pharaoh	Savvy Textiles	94	5
Regency Stripe	Savvy Textiles	78	6
Sheer	Savvy Textiles	78	4
Shot Silk	Savvy Textiles	80	7
Strata SPC	Savvy Textiles	81	5
Taffeta	Savvy Textiles	80	7
Topaz (Blackout)	Savvy Textiles	82	4
Vines Charcoal & Cream	Savvy Textiles	87	7
Vines White	Savvy Textiles	87	6
Voile FR	Savvy Textiles	78	2
Backing Fabric	Savvy Textiles	80	1
Palm Beach BO	Savvy Textiles	118	3
3PES	Savvy Textiles	110	1
Cosmos	Savvy Textiles	118	2
Marula	Savvy Textiles	94	3
Essentials	Savvy Textiles	118	1
Seada	Savvy Textiles	104	3
Darksource	Savvy Textiles	108	1
Palm Beach LF	Savvy Textiles	118	2
Marula LF	Savvy Textiles	94	1
Ice FR LF	Savvy Textiles	94	1
Ice Board FR LF	Savvy Textiles	94	1
Gold Chic FR LF	Savvy Textiles	110	1
Fire	Savvy Textiles	110	1
Wind	Savvy Textiles	110	1
Island	Savvy Textiles	108	1

Square Yardage Fabric Prices: Fabric Group 1 - $30, Group 2 - $35, Group 3 - $50, Group 4 - $65, Group 5 - $85, Group 6 - $100.

Savvy Shade Price List

RollEase Open Roll

Group 1

	25	37	49	61	73	85	97	109	121	133	145	Blackout Channels	ShyZip* Channels
37	102	115	130	216	238	263	291	321	658	694	735	125	252
49	109	124	143	232	258	285	317	350	690	729	774	158	303
61	116	134	157	249	277	308	343	379	722	765	813	190	353
73	122	144	170	265	297	330	369	408	755	800	851	223	403
85	129	154	183	281	316	353	394	437	787	836	890	255	454
97	136	164	196	297	336	376	420	466	819	871	928	288	504
109	142	174	209	314	355	398	446	495	851	906	967	320	555
121	149	184	222	330	374	421	472	524	883	942	1005	353	605
133	156	193	235	346	394	443	498	553	916	977	1044	385	655
145	162	203	248	362	413	466	523	582	948	1013	1083	418	706

Group 2

	25	37	49	61	73	85	97	109	121	133	145	Blackout Channels	ShyZip* Channels
37	106	120	137	225	249	275	305	337	675	713	756	125	252
49	113	131	152	243	271	300	334	370	712	753	800	158	303
61	121	142	167	262	293	326	363	402	748	793	843	190	353
73	129	153	182	280	315	352	393	435	785	833	887	223	403
85	136	164	196	298	337	377	422	468	821	873	931	255	454
97	144	176	211	317	359	403	451	501	857	913	974	288	504
109	151	187	226	335	381	428	480	534	894	953	1018	320	555
121	159	198	241	354	403	454	510	567	930	993	1062	353	605
133	166	209	256	372	425	479	539	599	967	1033	1105	385	655
145	174	220	270	390	447	505	568	632	1003	1074	1149	418	706

Group 3

	25	37	49	61	73	85	97	109	121	133	145	Blackout Channels	ShyZip* Channels
37	112	128	148	239	265	294	327	361	702	743	789	125	252
49	120	141	166	260	291	324	361	400	745	790	840	158	303
61	129	154	183	282	317	354	396	439	788	837	892	190	353
73	138	168	201	304	343	384	430	478	831	885	943	223	403
85	147	181	218	325	369	415	465	516	875	932	995	255	454
97	156	194	236	347	395	445	499	555	918	979	1047	288	504
109	165	207	253	369	421	475	534	594	961	1027	1098	320	555
121	174	220	270	391	447	505	568	633	1004	1074	1150	353	605
133	183	234	288	412	473	536	603	672	1047	1121	1201	385	655
145	192	247	305	434	499	566	637	710	1090	1169	1253	418	706

System Options

	25	37	49	61	73	85	97	109	121	133	145
Square Fascia	60	71	82	92	103	114	125	135	146	157	168
Round Cassette	42	62	83	103	123	143	164	184	204	225	245
Open Shade 1	300	365	431	496	562	627	692	758	823	889	954
Open Shade 2	380	480	580	680	780	880	981	1,081	1,181	1,281	1,381
Deko S70	197	214	230	247	263	280	297	313	330	346	363
Deko OR45	147	147	147	147	147	146	146	146	146	146	145

Group 4

	25	37	49	61	73	85	97	109	121	133	145	Blackout Channels	ShyZip* Channels
37	124	146	173	269	301	336	374	415	762	808	860	125	252
49	136	164	196	298	336	376	421	467	820	872	929	158	303
61	148	182	219	327	371	417	467	519	877	935	998	190	353
73	160	199	243	356	405	457	513	571	935	998	1067	223	403
85	172	217	266	385	440	498	559	623	993	1062	1136	255	454
97	183	235	289	414	475	538	606	675	1050	1125	1205	288	504
109	195	252	313	443	510	579	652	727	1108	1189	1275	320	555
121	207	270	336	472	545	619	698	778	1166	1252	1344	353	605
133	219	287	359	501	579	660	744	830	1223	1315	1413	385	655
145	231	305	383	530	614	700	790	882	1281	1379	1482	418	706

Group 5

	25	37	49	61	73	85	97	109	121	133	145	Blackout Channels	ShyZip* Channels
37	138	168	201	304	343	385	430	478	832	885	944	125	252
49	154	191	231	341	388	437	490	545	906	967	1033	158	303
61	169	213	261	379	433	490	550	612	981	1049	1123	190	353
73	185	236	292	417	479	542	610	680	1056	1132	1212	223	403
85	200	259	322	455	524	595	670	747	1131	1214	1302	255	454
97	216	282	352	492	569	647	730	814	1206	1296	1392	288	504
109	231	305	382	530	614	700	790	882	1280	1378	1481	320	555
121	246	328	413	568	659	752	850	949	1355	1460	1571	353	605
133	262	351	443	605	704	805	910	1017	1430	1542	1660	385	655
145	277	373	473	643	749	857	970	1084	1505	1625	1750	418	706

Group 6

	25	37	49	61	73	85	97	109	121	133	145	Blackout Channels	ShyZip* Channels
37	152	188	227	337	383	431	483	537	897	957	1022	125	252
49	171	216	264	383	438	494	556	619	988	1057	1131	158	303
61	189	243	301	428	492	558	629	700	1079	1157	1240	190	353
73	208	271	338	474	547	622	701	782	1170	1257	1349	223	403
85	227	299	374	520	602	686	774	864	1261	1356	1458	255	454
97	246	327	411	566	657	750	847	946	1351	1456	1566	288	504
109	264	354	448	612	712	813	920	1028	1442	1556	1675	320	555
121	283	382	485	657	766	877	993	1110	1533	1656	1784	353	605
133	302	410	522	703	821	941	1065	1191	1624	1756	1893	385	655
145	321	438	558	749	876	1005	1138	1273	1715	1856	2002	418	706

Group 7

Price Group 6 + 15%

System Options

	25	37	49	61	73	85	97	109	121	133	145
Deko OR55	292	319	346	373	400	426	453	480	507	534	561
Moduline 105	292	319	346	373	400	426	453	480	507	534	561
SL111	1,129	1,204	1,279	1,355	1,430	1,506	1,581	1,656	1,732	1,807	1,882
Aero	965	1,001	1,037	1,072	1,108	1,144	1,179	1,215	1,251	1,287	1,322
Acmeda	485	494	504	514	524	534	544	554	564	574	583
Admeda w/ Fascia	545	565	586	607	627	648	669	689	710	731	751

Roller Shade Motorization

Nice

Motors

Era S 750
Era Zero 750

Controls

Transmitter P6 263
Transmitter P1 198
Wall Transmitter W1 193
Wall Transmitter W6 260
Nemo Wireless Wind & Sun 688
Volo Wired Wind and Sun 182
Volo S Wired Power/Wireless Signal 243
Mindy 381
Niceway 1 Group 121
Niceway 2 Groups 182
Niceway 3 Group 229
Niceway 4 Groups 240
Niceway 6 Groups 250
Niceway 9 Step-by-step 250
Niceway 80 Channel 455
Stone (White, Transparent, Orange) 75
Wall Plaque 35
(White, Black, Aluminum, Graphite Transparent, Seawater)
Ondo (White) 35
Mini (Fern, Graphite, Ice Blue, Orange) 25

Somfy

Common Items:

R28 12vDC - Including wand and batteries 637
ST30RTS - w/ single motor power supply 801
ST50 RTS 750
Telis 4 (5 Channel) - Pure White 180
MyLink 500

Low Voltage Motors:

R28 12vDC - without batteries 476
Battery Wand (not including batteries) 69
Battery Wand with batteries 162
Solar Pack (solar panel, battery tube & battery) 351
Sonesse 30 - without single 24v motor power supply
RTS 690
RS485 759
Sonesse 30 - With single 24v motor power supply
RTS 801
RS485 870
Simi 3.5 SOLAR (Great for exterior)
RTS with solar charger and battery 1400

110 Volt Motors

Sonesse 50
RTS 695
Standard 580
ILT 1026
Altus 50
RTS 746
Standard 491

ILT Motor Controls

ILT2 3 Button Switch 215
ILT2 6 Button Switch 250
RS485 to ILT - 4 motor 275
3 Way Splitter 60
ILT Limit Set Tool 205

Standard motor Controls

Paddle Switch - White, Ivory 50
IGC 467
IGC 3N1 900
IGC Switch - Single or Dual Button - White, Ivory 185

RTS Controls

Telis 1 (1 Channel) - Pure White 175
Telis 16 (16 Channel) - Pure White/Silver 650/710
Telis 4 - Pure White / Silver or Black 180/295
Telis 4 Soliris Patio - W/ Sun Sensor Control 325
Telis 4 Modulis - Tilt Control - Pure White 400
Telis 1 Chronis - Timer - Pure / Silver 450/500
DecoFlex Wirefree Wall Switch Options:
5 Channel Switch - White, Ivory, Black or Almond 387
DecoFlex Options Continued:
4, 3 or 2 Channel - Face Plate Only 30
Buttons - ALL, BEDROOM, LIVING RM, KITCHEN, DINING RM, Contact Customer Service for other options 10
Sunis Indoor WireFree RTS 560
ThermosSunis Indoor WireFree 640
Eolis 3D WireFree Wind Sensor - White, Off WH, Black 520
Eolis RTS 24VDC Wind Sensor (Whirlybird) 430
Soliris RTS 24VDC Sun and Wind Sensor 550

Integration Controls

Universal RTS Interface II (URTSI) -
16 Channel RS232/RS485 to RTS 1250
ST30 Power/Control Distribution Panel - 10 motor 315

Savvy Motors

M1 Battery Operated Motor
w/ Internal Battery & Solar Charger or Wall Charger ... 400
Single Channel Remote 75
15 Channel Remote 150
Single Channel Remote with Timer 200

Motorization Shade Weight Charts

"Screen" Fabric

	25	37	49	61	73	85	97	109	121	133	145
37	0.1	0.1	0.1	0.2	0.3	0.3	0.3	0.4	0.7	0.7	0.8
49	0.1	0.1	0.2	0.2	0.3	0.4	0.4	0.5	0.8	0.9	1.0
61	0.1	0.1	0.2	0.3	0.4	0.4	0.5	0.6	1.0	1.1	1.2
73	0.1	0.2	0.3	0.3	0.4	0.5	0.6	0.7	1.2	1.3	1.4
85	0.1	0.2	0.3	0.4	0.5	0.6	0.7	0.8	1.3	1.5	1.6
97	0.1	0.2	0.3	0.4	0.6	0.7	0.8	0.9	1.5	1.7	1.8
109	0.2	0.2	0.4	0.4	0.6	0.7	0.8	1.0	1.7	1.8	2.0
121	0.2	0.3	0.4	0.5	0.7	0.8	0.9	1.0	1.8	2.0	2.2
133	0.2	0.3	0.4	0.5	0.8	0.9	1.0	1.1	2.0	2.2	2.4
145	0.2	0.3	0.5	0.6	0.8	1.0	1.1	1.2	2.2	2.4	2.6
157	0.2	0.3	0.5	0.6	0.9	1.0	1.2	1.3	2.3	2.6	2.8
169	0.2	0.4	0.5	0.7	1.0	1.1	1.3	1.4	2.5	2.7	3.0
181	0.3	0.4	0.6	0.7	1.0	1.2	1.3	1.5	2.7	2.9	3.2
193	0.3	0.4	0.6	0.8	1.1	1.3	1.4	1.6	2.8	3.1	3.4

"Blackout" Fabric

	25	37	49	61	73	85	97	109	121	133	145
37	0.1	0.2	0.2	0.3	0.4	0.5	0.6	0.6	1.1	1.2	1.3
49	0.1	0.2	0.3	0.4	0.5	0.6	0.7	0.8	1.4	1.5	1.6
61	0.2	0.2	0.4	0.4	0.6	0.7	0.8	0.9	1.6	1.8	1.9
73	0.2	0.3	0.4	0.5	0.7	0.8	1.0	1.1	1.9	2.1	2.3
85	0.2	0.3	0.5	0.6	0.8	1.0	1.1	1.2	2.2	2.4	2.6
97	0.2	0.3	0.5	0.7	0.9	1.1	1.2	1.4	2.4	2.7	2.9
109	0.3	0.4	0.6	0.7	1.0	1.2	1.4	1.5	2.7	3.0	3.2
121	0.3	0.4	0.6	0.8	1.1	1.3	1.5	1.7	3.0	3.3	3.5
133	0.3	0.5	0.7	0.9	1.2	1.4	1.6	1.8	3.2	3.5	3.9
145	0.3	0.5	0.8	0.9	1.3	1.6	1.8	2.0	3.5	3.8	4.2
157	0.4	0.5	0.8	1.0	1.4	1.7	1.9	2.1	3.8	4.1	4.5
169	0.4	0.6	0.9	1.1	1.5	1.8	2.0	2.3	4.0	4.4	4.8
181	0.4	0.6	0.9	1.2	1.6	1.9	2.2	2.5	4.3	4.7	5.1
193	0.4	0.7	1.0	1.2	1.7	2.0	2.3	2.6	4.6	5.0	5.5

Shade weights represented with average fabrics and bottom rails with 15% tolerance. Motor torque must be greater than shade weight chart for the motor to work. When near limits, the bigger motor option is always preferable. Motor torque limits are listed below:

R28 ..... 1.1
ST30 2
Simu 3.5 6
ST50 6
Nice Era S 6
Nice Era Zero 6
Savvy M1 2

Approximate Shade Diameter

"Thin" Fabric

	25	37	49	61	73	85	97	109	121	133	145
37	1.7	1.7	1.8	1.8	2.0	2.0	2.0	2.0	2.8	2.8	2.8
49	1.8	1.8	1.9	1.9	2.1	2.1	2.1	2.1	2.9	2.9	2.9
61	1.9	1.9	2.0	2.0	2.2	2.2	2.2	2.2	2.9	2.9	2.9
73	2.0	2.0	2.1	2.1	2.3	2.3	2.3	2.3	3.0	3.0	3.0
85	2.2	2.2	2.2	2.2	2.3	2.3	2.3	2.3	3.0	3.0	3.0
97	2.3	2.3	2.3	2.3	2.4	2.4	2.4	2.4	3.1	3.1	3.1
109	2.4	2.4	2.4	2.4	2.5	2.5	2.5	2.5	3.2	3.2	3.2
121	2.5	2.5	2.5	2.5	2.6	2.6	2.6	2.6	3.2	3.2	3.2
133	2.6	2.6	2.6	2.6	2.7	2.7	2.7	2.7	3.3	3.3	3.3
145	2.8	2.8	2.7	2.7	2.8	2.8	2.8	2.8	3.3	3.3	3.3
157	2.9	2.9	2.8	2.8	2.9	2.9	2.9	2.9	3.4	3.4	3.4
169	3.0	3.0	2.9	2.9	3.0	3.0	3.0	3.0	3.4	3.4	3.4
181	3.1	3.1	3.0	3.0	3.0	3.0	3.0	3.0	3.5	3.5	3.5
193	3.2	3.2	3.1	3.1	3.1	3.1	3.1	3.1	3.5	3.5	3.5

"Thick" Fabric

	25	37	49	61	73	85	97	109	121	133	145
37	1.9	1.9	2.0	2.0	2.2	2.2	2.2	2.2	2.9	2.9	2.9
49	2.1	2.1	2.2	2.2	2.3	2.3	2.3	2.3	3.0	3.0	3.0
61	2.3	2.3	2.3	2.3	2.4	2.4	2.4	2.4	3.1	3.1	3.1
73	2.4	2.4	2.5	2.5	2.5	2.5	2.5	2.5	3.2	3.2	3.2
85	2.6	2.6	2.6	2.6	2.7	2.7	2.7	2.7	3.3	3.3	3.3
97	2.8	2.8	2.8	2.8	2.8	2.8	2.8	2.8	3.3	3.3	3.3
109	3.0	3.0	2.9	2.9	2.9	2.9	2.9	2.9	3.4	3.4	3.4
121	3.1	3.1	3.1	3.1	3.1	3.1	3.1	3.1	3.5	3.5	3.5
133	3.3	3.3	3.2	3.2	3.2	3.2	3.2	3.2	3.6	3.6	3.6
145	3.5	3.5	3.4	3.4	3.3	3.3	3.3	3.3	3.7	3.7	3.7
157	3.7	3.7	3.5	3.5	3.4	3.4	3.4	3.4	3.7	3.7	3.7
169	3.8	3.8	3.7	3.7	3.6	3.6	3.6	3.6	3.8	3.8	3.8
181	4.0	4.0	3.8	3.8	3.7	3.7	3.7	3.7	3.9	3.9	3.9
193	4.2	4.2	4.0	4.0	3.8	3.8	3.8	3.8	4.0	4.0	4.0

Shade diameters are based on Blind Supply's version of RollEase Tube Suggestions. SunProject and other system tube sizes may vary.

Classic Cellular Shades

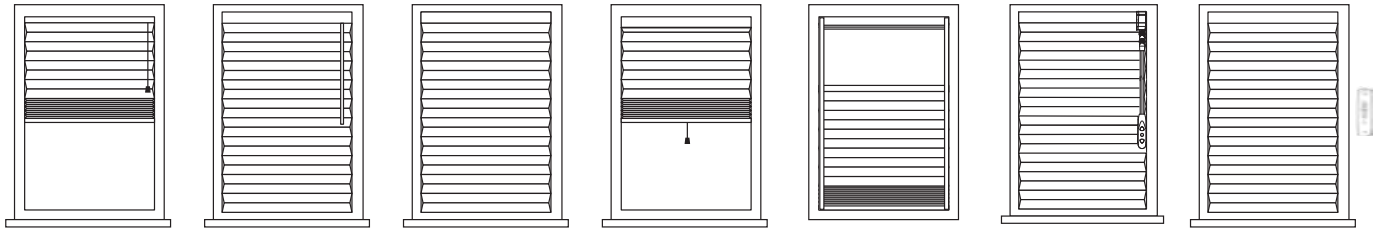

Standard | Continuous Cordloop | Cordless | Cordless Plus | Skylight | Simple Touch | Motorized

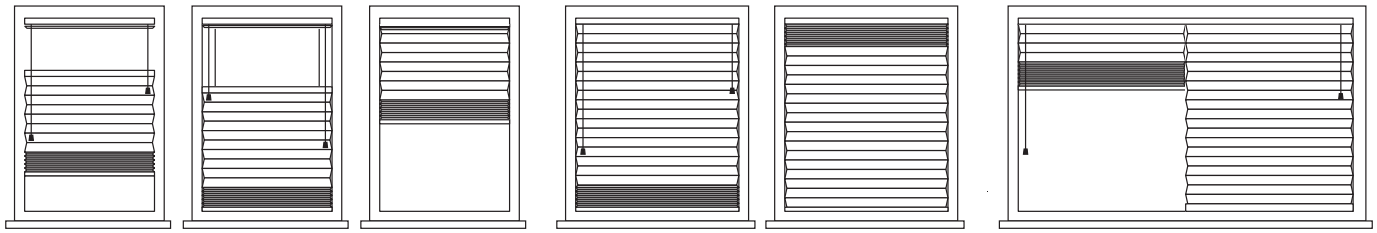

Top Down / Bottom Up Corded / Cordless | Day/Night Corded / Cordless | 2-on-1

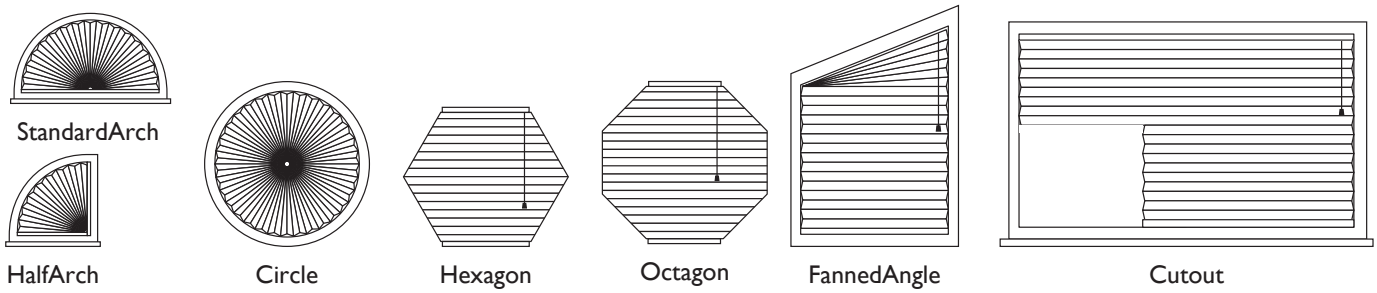

StandardArch | HalfArch | Circle | Hexagon | Octagon | FannedAngle | Cutout

Cellular Shade Fabrics

9/16" Single cell light filtering
PLS310-001 Cotton
PLS310-002 Snow White
PLS310-003 Onion
PLS310-004 Alabaster
PLS310-005 Cream
PLS310-006 Fawn
PLS310-007 Biscuit
PLS310-008 Pongee
PLS310-009 Ocher
PLS310-010 Tan
PLS310-011 Terra Cotta
PLS310-012 Cocoa
PLS310-013 Spring Green
PLS310-014 Water Green
PLS310-015 Avocado
PLS310-016 Roseate
PLS310-018 Stone Red
PLS310-019 Agate Red
PLS310-020 Bordeaux
PLS310-021 Gray Sheen
PLS310-022 Marine Blue
PLS310-023 Royal Gray
PLS310-024 Jean Blue
PLS310-025 Black
PLS310-026 Wisteria
PLS310-030 Anthracite
PLS310-069 White Dove
PLS310-070 Winter White
PLS310-094 Teal
PLS310-100 Buff Yellow
PLS310-346 Antique Pewter
PLS310-470 Slate
PLS310-326 Dark Chocolate

9/16" Single cell blackout
PLS320-001 Cotton
PLS320-002 Snow White
PLS320-003 Onion
PLS320-004 Alabaster
PLS320-006 Fawn
PLS320-008 Pongee
PLS320-009 Ocher
PLS320-012 Cocoa
PLS320-015 Avocado
PLS320-020 Bordeaux
PLS320-021 Gray Sheen
PLS320-024 Jean Blue
PLS320-025 Black
PLS320-069 White Dove
PLS320-070 Winter White
PLS320-326 Dark Chocolate
PLS320-346 Antique Pewter
PLS320-470 Slate

3/4" Single cell smooth blackout
PLS44C-002 Snow White
PLS44C-005 Cream
PLS44C-021 Gray Sheen
PLS44C-070 Winter White
PLS44C-489 Bamboo
PLS44C-490 Velvet Fern
PLS44C-491 Chocolate Bliss
PLS44C-492 Warm Cocoa

7/16" double cell light filtering
PLX3A0-001 Cotton
PLX3A0-069 White Dove
PLX3A0-070 Winter White
PLX3A0-002 Snow White
PLX3A0-003 Onion
PLX3A0-004 Alabaster
PLX3A0-005 Cream
PLX3A0-006 Fawn
PLX3A0-007 Biscuit
PLX3A0-008 Pongee
PLX3A0-009 Ocher
PLX3A0-010 Tan
PLX3A0-011 Terra Cotta
PLX3A0-012 Cocoa
PLX3A0-013 Spring Green
PLX3A0-014 Water Green
PLX3A0-015 Avocado
PLX3A0-016 Roseate
PLX3A0-018 Stone Red
PLX3A0-019 Agate Red
PLX3A0-020 Bordeaux
PLX3A0-021 Gray Sheen
PLX3A0-022 Marine Blue
PLX3A0-023 Royal Gray
PLX3A0-024 Jean Blue
PLX3A0-025 Black
PLX3A0-026 Wisteria
PLX3A0-326 Dark Chocolate

9/16" Single cell sheer
PLS360-001 Cotton
PLS360-002 Snow White
PLS360-004 Alabaster
PLS360-006 Fawn
PLS360-012 Cocoa

9/16" Single cell crush
PLS310-001CR Cotton
PLS310-069CR White Dove
PLS310-070CR Winter White
PLS310-006CR Fawn
PLS310-012CR Cocoa

3/4" Single cell smooth light filtering
PLS43C-001 Cotton
PLS43C-002 Snow White
PLS43C-005 Cream
PLS43C-070 Winter White
PLS43C-489 Bamboo
PLS43C-490 Velvet Fern
PLS43C-491 Chocolate Bliss
PLS43C-492 Warm Cocoa

9/16" Single cell slub woven
PLS37A-001 Cotton
PLS37A-004 Alabaster
PLS37A-012 Cocoa
PLS37A-326 Dark Chocolate
PLS37A-025 Black

Size Sandards

	Corded	Cordless	Corded TDBU	Cordless TDBU	Clutch	Cordless Plus	Skylight	Simple Touch	Stock Cellulars	Arches	Quarter Arches	Circles	Octagon	Trapazoid
Min Width	7	18	12	19	18	21	16	28	18	18	9	12	12	12
Min Height	10	10	10	10	10	10	10	10	48*	84	50	42	48	60
Max Width	144	84	72	84	132	72	60	96	72	9			12	12
Max Height	144	82	72	72	120	72	60	118	82	48			48	72

Stacking Chart:

Shade Stacking Height (In Inches)	36" Drop	48" Drop	60" Drop	72" Drop	84" Drop	96" Drop	108" Drop	120" Drop	132" Drop	144" Drop	R Value
9/16" Single Light Filtering	2	2.25	2.5	2.8	3	3.3	3.5	3.83	4	4.33	3.5
9/16" Single Cell Blackout	1.81	2	2.19	2.38	2.56	2.75	2.94	3.13	3.31	3.5	4.3
7/16" Light Filtering Double	2.43	2.82	3.21	3.61	4	4.39	4.79	5.18	5.57	5.96	3.6
3/4" Single Smooth Light Filtering	1.75	1.88	2	2.13	2.25	2.38	2.5	2.63	2.75	2.88	3.7
3/4" Single Smooth Blackout	1.78	1.91	2.04	2.18	2.31	2.44	2.58	2.71	2.84	2.98	4.4
9/16" Single Cell Linen Print LF	2.13	2.38	2.63	2.88	3.13	3.38	3.63	3.88	4.13	4.38	3.5
9/16" Single Cell Sheer	2.29	2.62	2.88	3.15	3.42	3.69	3.96	4.22	4.49	4.76	0.7
9/16" Single Cell Crush	2.47	2.84	3.16	3.47	3.78	4.09	4.41	4.72	5.03	5.34	3.4
9/16" Single Cell Slub Woven	2.25	2.54	2.83	3.13	3.42	3.71	4	4.29	4.58	4.88	2.8

Cord & Bracket Counts

Width	Cord Route	Lift Cord #	Cord Lock	Bracket Qty (Corded)	Bracket Qty (TDBU)	Bracket Qty (Cordless & Clutch)
5"~12.9"	2.5"	2	3/4"	2	2	2
13"~24.9"	4"	2	2"	2	2	2
25"~36.9"	8"	2	2"	2	2	2
37"~41.9"	12"	2	2"	2	2	2
42"~70.9"	12"	3	2"	3	4	3
71"~95.9"	12"	4	2"	4	N/A	4
96" ~ 120.9"	12"	4	2"	5	N/A	5 (Clutch Only)
121" ~ 144"	12"	4	2"	6	N/A	6 (Clutch Only)

Motorization

Somfy:

CT Motor Including wand and batteries 637

Telis 4 (5 Channel) - Pure White 180
Telis 1 (1 Channel) - Pure White 175

Battery Wand (not including batteries).....69
Battery Wand with batteries 162
Solar Pack (solar panel, battery tube & battery).....351
MyLink 500

SimpleTouch Motor

WandMotor including batteries.....400
Power Adaptor 60

Surcharge Options

Width>	24	30	36	42	48	54	60	66	72	84	96	108	120
Continuous Cordloop	36	38	40	42	45	47	49	51	53	57	61	66	70
Cordless	75	80	86	91	97	102	108	113	118	129	n/a	n/a	n/a
Cordless Plus	80	86	92	98	104	110	116	122	128	n/a	n/a	n/a	n/a
TDBU Cordless	140	150	160	170	180	190	200	210	220	240	n/a	n/a	n/a
TDBU	43	43	44*	43	43	43	43	43	43	43	43	43	43

*jk, it's 43

9/16" Single Cell Light Filtering

	24	30	36	42	48	54	60	66	72	84	96	108	120	132	144
36	83	98	114	129	145	160	175	191	206	237	268	299	330	361	392
42	90	107	124	141	158	175	193	210	227	261	295	330	364	398	433
48	96	115	134	153	172	191	210	229	247	285	323	361	398	436	474
54	103	124	144	165	186	206	227	247	268	309	350	391	433	474	515
60	110	132	155	177	199	222	244	266	288	333	378	422	467	511	556
66	117	141	165	189	213	237	261	285	309	357	405	453	501	549	597
72	124	150	175	201	227	252	278	304	329	381	432	484	535	587	638
78	131	158	186	213	240	268	295	323	350	405	460	515	569	624	679
84	138	167	196	225	254	283	312	341	371	429	487	545	604	662	720
90	144	175	206	237	268	299	329	360	391	453	514	576	638	699	761
96	151	184	216	249	281	314	346	379	412	477	542	607	672	737	802
108	165	201	237	273	309	345	381	417	453	525	596	668	740	812	884
120	179	218	257	297	336	376	415	454	494	572	651	730	809	888	966
132	192	235	278	321	363	406	449	492	535	620	706	792	877	963	1,048
144	206	252	298	345	391	437	483	530	576	668	761	853	946	1,038	1,131

7/16" Double Cell Light Filtering

	24	30	36	42	48	54	60	66	72	84	96	108	120	132	144
36	96	113	130	147	164	181	198	214	231	265	299	333	366	400	434
42	105	124	143	162	182	201	220	239	258	296	334	372	411	449	487
48	114	135	157	178	199	221	242	263	284	327	370	412	455	498	540
54	123	146	170	193	217	241	264	288	311	358	405	452	499	546	593
60	132	158	183	209	235	260	286	312	338	389	441	492	543	595	646
66	141	169	197	224	252	280	308	336	364	420	476	532	588	644	700
72	149	180	210	240	270	300	330	361	391	451	511	572	632	692	753
78	158	191	223	255	288	320	353	385	417	482	547	612	676	741	806
84	167	202	236	271	306	340	375	409	444	513	582	651	721	790	859
90	176	213	250	286	323	360	397	434	470	544	618	691	765	838	912
96	185	224	263	302	341	380	419	458	497	575	653	731	809	887	965
108	203	246	289	333	376	420	463	507	550	637	724	811	898	984	1,071
120	220	268	316	364	412	460	508	555	603	699	795	890	986	1,082	1,178
132	238	290	343	395	447	499	552	604	656	761	866	970	1,075	1,179	1,284
144	256	312	369	426	483	539	596	653	709	823	936	1,050	1,163	1,277	1,390

9/16" Single Cell Blackout

	24	30	36	42	48	54	60	66	72	84	96	108	120	132	144
36	103	123	143	164	184	205	225	246	266	307	348	388	429	470	511
42	114	137	160	183	206	230	253	276	299	345	392	438	485	531	577
48	125	151	177	203	229	254	280	306	332	384	436	488	540	592	644
54	136	164	193	222	251	279	308	337	365	423	480	538	595	653	710
60	147	178	210	241	273	304	336	367	399	462	525	587	650	713	776
66	158	192	226	261	295	329	363	398	432	500	569	637	706	774	843
72	169	206	243	280	317	354	391	428	465	539	613	687	761	835	909
78	180	220	260	299	339	379	419	458	498	578	657	737	816	896	975
84	191	234	276	319	361	404	446	489	531	616	701	786	872	957	1,042
90	202	247	293	338	383	429	474	519	564	655	746	836	927	1,017	1,108
96	213	261	309	357	405	453	501	550	598	694	790	886	982	1,078	1,174
108	235	289	342	396	450	503	557	610	664	771	878	985	1,093	1,200	1,307
120	257	316	376	435	494	553	612	671	730	848	967	1,085	1,203	1,321	1,440
132	279	344	409	473	538	603	667	732	797	926	1,055	1,184	1,314	1,443	1,572
144	302	372	442	512	582	652	723	793	863	1,003	1,144	1,284	1,424	1,565	1,705

9/16" Single Cell Light Filtering Sheer Fabric

	24	30	36	42	48	54	60	66	72	84	96	108	120	132	144
36	139	164	190	216	242	268	294	320	345	397	449	501	552	604	656
42	150	179	207	236	265	294	322	351	380	437	495	552	609	667	724
48	162	193	225	256	288	319	351	383	414	477	540	604	667	730	793
54	173	207	242	276	311	345	380	414	448	517	586	655	724	793	862
60	184	222	259	296	334	371	408	446	483	557	632	707	781	856	930
66	196	236	276	316	357	397	437	477	517	598	678	758	839	919	999
72	207	250	293	336	379	422	465	509	552	638	724	810	896	982	1,068
78	219	265	311	356	402	448	494	540	586	678	769	861	953	1,045	1,137
84	230	279	328	376	425	474	523	572	620	718	815	913	1,010	1,108	1,205
90	242	293	345	397	448	500	551	603	655	758	861	964	1,068	1,171	1,274
96	253	308	362	417	471	526	580	634	689	798	907	1,016	1,125	1,234	1,343
108	276	336	396	457	517	577	637	697	758	878	999	1,119	1,239	1,360	1,480
120	299	365	431	497	563	629	695	760	826	958	1,090	1,222	1,354	1,486	1,618
132	322	394	465	537	608	680	752	823	895	1,038	1,182	1,325	1,468	1,612	1,755
144	345	422	500	577	654	732	809	886	964	1,119	1,273	1,428	1,583	1,738	1,892

9/16" Single Cell Light Filtering Premium Crush/Slub Woven

	24	30	36	42	48	54	60	66	72	84	96	108	120	132	144
36	152	180	209	237	266	294	322	351	379	436	492	549	606	663	719
42	165	196	228	259	291	322	354	385	417	480	543	606	669	732	795
48	177	212	247	281	316	350	385	420	454	524	593	662	732	801	870
54	190	228	265	303	341	379	417	454	492	568	643	719	794	870	946
60	202	243	284	325	366	407	448	489	530	612	694	775	857	939	1,021
66	215	259	303	347	391	435	479	523	568	656	744	832	920	1,008	1,096
72	228	275	322	369	416	464	511	558	605	700	794	889	983	1,077	1,172
78	240	290	341	391	441	492	542	593	643	744	844	945	1,046	1,146	1,247
84	253	306	360	413	467	520	574	627	681	788	895	1,002	1,109	1,216	1,323
90	265	322	378	435	492	548	605	662	718	832	945	1,058	1,171	1,285	1,398
96	278	338	397	457	517	577	636	696	756	876	995	1,115	1,234	1,354	1,473
108	303	369	435	501	567	633	699	765	831	964	1,096	1,228	1,360	1,492	1,624
120	328	400	473	545	617	690	762	834	907	1,052	1,196	1,341	1,486	1,630	1,775
132	353	432	510	589	668	746	825	904	982	1,140	1,297	1,454	1,611	1,769	1,926
144	378	463	548	633	718	803	888	973	1,058	1,227	1,397	1,567	1,737	1,907	2,077

9/16" Single Cell Light Filt. Linen Print & 3/4" Single Cell Light Filt. Smooth

	24	30	36	42	48	54	60	66	72	84	96	108	120	132	144
36	73	86	100	114	127	141	154	168	182	209	236	263	290	318	345
42	79	94	109	124	139	154	169	185	200	230	260	290	320	351	381
48	85	102	118	135	151	168	185	201	218	251	284	317	351	384	417
54	91	109	127	145	163	181	200	218	236	272	308	344	381	417	453
60	97	117	136	156	175	195	215	234	254	293	332	372	411	450	489
66	103	124	145	166	187	209	230	251	272	314	356	399	441	483	525
72	109	132	154	177	199	222	245	267	290	335	380	426	471	516	561
78	115	139	163	187	212	236	260	284	308	356	405	453	501	549	598
84	121	147	172	198	224	249	275	300	326	377	429	480	531	582	634
90	127	154	181	208	236	263	290	317	344	398	453	507	561	616	670
96	133	162	190	219	248	276	305	334	362	419	477	534	591	649	706
108	145	177	208	240	272	303	335	367	398	462	525	588	652	715	778
120	157	192	226	261	296	330	365	400	434	504	573	642	712	781	850
132	169	207	245	282	320	358	395	433	471	546	621	697	772	847	923
144	181	222	263	303	344	385	425	466	507	588	669	751	832	914	995

9/16" Single Cell Light Filtering FR

	24	30	36	42	48	54	60	66	72	84	96	108	120	132	144
36	108	128	148	168	188	208	228	248	268	308	349	389	429	469	509
42	117	139	161	183	206	228	250	273	295	340	384	429	473	518	563
48	125	150	174	199	224	248	273	297	322	371	420	469	518	567	616
54	134	161	188	215	241	268	295	322	348	402	455	509	562	616	669
60	143	172	201	230	259	288	317	346	375	433	491	549	607	665	723
66	152	183	215	246	277	308	339	370	402	464	526	589	651	714	776
72	161	194	228	261	295	328	362	395	428	495	562	629	696	763	829
78	170	206	241	277	312	348	384	419	455	526	598	669	740	811	883
84	179	217	255	292	330	368	406	444	482	557	633	709	785	860	936
90	188	228	268	308	348	388	428	468	508	589	669	749	829	909	989
96	197	239	281	324	366	408	450	493	535	620	704	789	874	958	1,043
108	214	261	308	355	401	448	495	542	588	682	775	869	963	1,056	1,150
120	232	283	335	386	437	488	539	591	642	744	847	949	1,051	1,154	1,256
132	250	306	361	417	473	528	584	640	695	806	918	1,029	1,140	1,252	1,363
144	268	328	388	448	508	568	628	688	749	869	989	1,109	1,229	1,350	1,470

9/16" Single Cell Blackout FR

	24	30	36	42	48	54	60	66	72	84	96	108	120	132	144
36	133	160	187	213	240	266	293	319	346	399	452	505	558	611	664
42	148	178	208	238	268	298	329	359	389	449	509	570	630	690	751
48	162	196	230	263	297	331	365	398	432	499	567	634	702	769	837
54	177	214	251	289	326	363	400	438	475	550	624	699	774	848	923
60	191	232	273	314	355	395	436	477	518	600	682	764	846	927	1,009
66	205	250	294	339	383	428	472	517	561	650	739	828	917	1,006	1,095
72	220	268	316	364	412	460	508	556	604	701	797	893	989	1,085	1,182
78	234	286	337	389	441	493	544	596	648	751	854	958	1,061	1,164	1,268
84	248	304	359	414	470	525	580	635	691	801	912	1,022	1,133	1,244	1,354
90	263	322	381	439	498	557	616	675	734	852	969	1,087	1,205	1,323	1,440
96	277	340	402	465	527	590	652	714	777	902	1,027	1,152	1,277	1,402	1,527
108	306	376	445	515	585	654	724	793	863	1,002	1,142	1,281	1,420	1,560	1,699
120	335	411	488	565	642	719	796	873	949	1,103	1,257	1,410	1,564	1,718	1,871
132	363	447	531	615	699	784	868	952	1,036	1,204	1,372	1,540	1,708	1,876	2,044
144	392	483	575	666	757	848	939	1,031	1,122	1,304	1,487	1,669	1,852	2,034	2,216

3/4" Single Cell Blackout Smooth

	24	30	36	42	48	54	60	66	72	84	96	108	120	132	144
36	94	113	132	151	170	188	207	226	245	282	320	357	395	433	470
42	105	126	147	169	190	211	233	254	275	318	361	403	446	488	531
48	115	139	162	186	210	234	258	282	306	353	401	449	497	544	592
54	125	151	178	204	231	257	283	310	336	389	442	495	548	600	653
60	135	164	193	222	251	280	309	338	367	425	483	540	598	656	714
66	145	177	208	240	271	303	334	366	397	460	523	586	649	712	775
72	155	189	224	258	292	326	360	394	428	496	564	632	700	768	836
78	166	202	239	275	312	349	385	422	458	531	605	678	751	824	897
84	176	215	254	293	332	371	411	450	489	567	645	724	802	880	958
90	186	228	269	311	353	394	436	478	519	603	686	769	853	936	1,019
96	196	240	285	329	373	417	461	506	550	638	727	815	903	992	1,080
108	216	266	315	364	414	463	512	562	611	709	808	907	1,005	1,104	1,202
120	237	291	346	400	454	509	563	617	672	781	889	998	1,107	1,216	1,324
132	257	317	376	436	495	554	614	673	733	852	971	1,090	1,209	1,328	1,446
144	277	342	407	471	536	600	665	729	794	923	1,052	1,181	1,310	1,439	1,568

Stock
Cordless Cellular Shades

Single Cell Light Filtering

	24	30	38	46	54	64	72
48	88	104	126	148	169	196	218
64	94	112	136	160	184	214	238
82	122	141	167	193	219	251	277

Single Cell Blackout

	24	30	38	46	54	64	72
48	106	126	152	179	205	238	265
64	114	137	167	198	228	266	296
82	126	152	186	221	255	299	333

Available in 5 fabrics:

- 9/16" Single Cell Light Filtering Cotton White
- 9/16" Single Cell Light Filtering Snow White
- 9/16" Single Cell Light Filtering Designer Print Cocoa
- 9/16" Single Cell Blackout Cotton White
- 9/16" Single Cell Blackout Onion

State-of-the-art vinyl head/bottom rail system

Easy to install hidden brackets

Actual width of stock shade is 1/2" less than the labeled width

100% Polyester Point Bond Non-woven Fabric

Ships within 48 hours

Quantity and "No Cut" discounts available!

Gallery Woven Woods

Roman Fold

Hobbled

**Surcharge option - 50%*

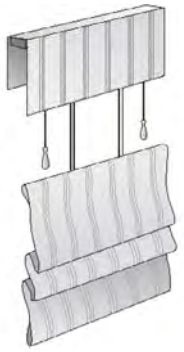

TDBU

**Surcharge option - see grid*

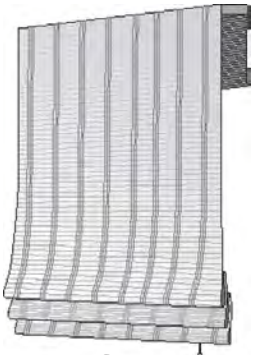

Old Style

Edge Banding

3 sides < 70" width: $120/Shade
3 sides > 70" width: $150/Shade
Bottom Only < 70" width: $150/Shade
Bottom Only > 70" width: $220/Shade
COM
2 sides < 70" width: $150/Shade
2 sides > 70" width: $220/Shade
3 sides < 70" width: $220/Shade
3 sides > 70" width: $290/Shade

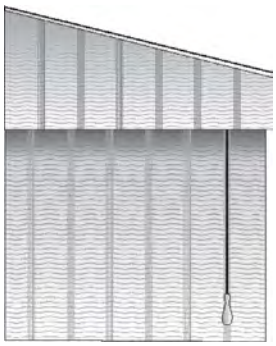

Slant Top

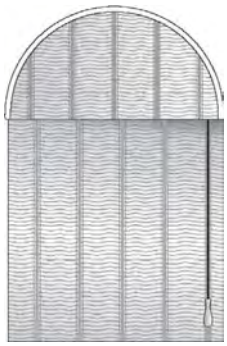

Arch Top

Max width: 72"
Gimp trim on top of valance
$150/ Shade

Hobbled Valance

Provide sketch with measurements
Indicate number of folds desired

Drapery

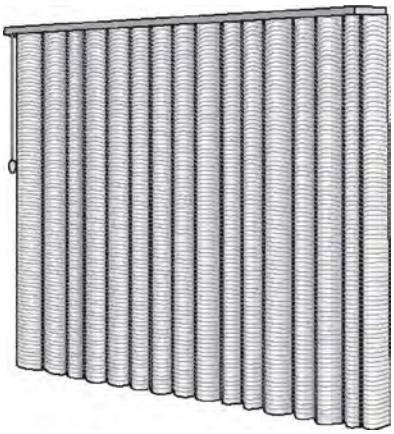

Contour Shade

**Surcharge option - Add liner and 20%*

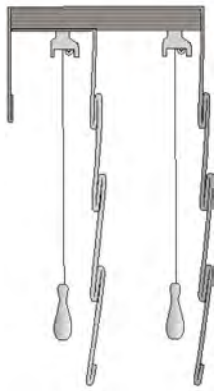

	Roman Fold	Roll-Up	Old Style	RollEase CCL	Duo-Fold	Hobble	Contour	"30" Motor	"50" Motor
Headrail Type	Wood	Wood	Wood	Wood	Wood	Wood	Wood	Wood	Wood
Headrail Size (Approximate)	1-1/2"x3/4"	1-1/2"x3/4"	1-1/2"x3/4"	2-1/2"x3/4"	1-1/2"x3/4"	1-1/2"x3/4"	1-1/2"x3/4"	1-1/2"x3/4"	3-1/2"x3/4"
Smallest Headrail Size	3/4"x3/4"	1-1/2"x3/4"	3/4"x3/4"	2-1/2"x3/4"	1-1/2"x3/4"	3/4"x3/4"	1-1/2"x3/4"	1-1/2"x3/4"	3-1/2"x3/4"
Swivel Cord Lock & Guide Pully	Standard	Standard	Standard	N/A	Standard	Standard	Standard	N/A	N/A
Continuous Cordloop	w/ RollEase	N/A	w/ RollEase	Standard	w/ RollEase	w/ RollEase	N/A	N/A	N/A
Control Positions	L or R	L or R	L or R	L or R	L or R	L or R	L or R	L or R	L or R
Min Width	10	10	10	20	10	10	10	20	31.5
Max Width	96	96	96	144	96	96	96	144	144
Min Height	24	24	24	26	24	24	24	26	26
Valance	6	6	N/A	6	4"IM/6"OM	6	6	6	8
Surcharge	Standard	NC	NC	See Price Grid	See Price Grid	50%	20%	See Motor Pricing	See Motor Pricing

Note: Standard wood headrail does not come with installation brackets.

Lining Options

• Privacy liner (thermal suede): Translucent liner that allows sunlight to filter through.
White Sheer, Ivory/White, Wheat.
• Blackout liner (thermal suede): Opaque room darkening liner.
Ivory/White, Tan/White, Brown/White, Chocolate/White.
• Custom's Own Material (COM liner): Please indicate when ordering and send material to factory.
• Liner material comes with horizontal splice every 54".
• Blackout will come colored side in unless specified otherwise.
• Some COM lining may be subject to a net $20.00 labor surcharge.
• Lining is attached to back of shade unless it is a contour shade.
• Lining is subject to wrinkling.

Natural Product Warnings

• Designer Natural Shades are an aesthetic collection of natural woods, bamboos, rattans, jutes, grasses, and reeds harvested from nature.
• Each season's harvests are a celebration of unique textures, colors, and striations that develop in nature.
• Natural materials are subject to variances in color, grain, texture, and warpage that are inherent qualities of all natural fibers.
• These variances are NOT manufacturing defects. The beauty of Designer Natural Shades lies in the distinctive irregularity of the slats and reeds.
• Even though rigid quality standards are maintained, the factory cannot guarantee exact color matches in each of the collections.
• Variations in color are natural and will be especially visible in lighter colored fibers.
• Variations in color will occur and are NOT manufacturing defects.
• Over time, the color of Designer Natural Shades will soften in the sun, exposing the beauty of mild tones.
• To avoid color variations that may occur between dye lots, it is highly recommended that multiple shade orders of the same pattern be placed at one time. This will lower the possibility of color variation due to different paints and stains.
• The factory is not responsible for variances in color for orders of the same pattern placed at different times.
• Availability of colors is subject to change without notice.
• Woven wood fabric can be affected by temperature and humidity changes, which can stretch or shrink the material.
• Shipping and handling may also cause a slight change in shade lengths.
Note: Material stretching I shrinking may be more noticeable on I.M. shades where exact lengths are more critical.
*Finished shade height may vary if exact dimension falls in the middle of a wide slat.
*Finished shade height may have a tolerance of ±1".
• Bamboo matchsticks have a tendency to stretch after installation.
• Finished edges of bamboo and large reeds may crack after cutting and assembly due to the inherent property of the natural materials.

Chart 1

	25	37	49	61	73	85	97	109	121	133	145
37	199	255	311	367	423	479	535	591	647	703	759
49	226	295	364	434	503	572	641	710	779	849	918
61	253	336	418	501	583	665	748	830	912	995	1077
73	281	376	472	568	663	759	854	950	1045	1141	1236
85	308	417	526	635	743	852	961	1069	1178	1287	1396
97	336	458	580	702	823	945	1067	1189	1311	1433	1555
109	363	498	633	769	904	1039	1174	1309	1444	1579	1714
121	391	539	687	836	984	1132	1280	1429	1577	1725	1873

Chart 2

	25	37	49	61	73	85	97	109	121	133	145
37	230	301	371	441	512	582	653	723	794	864	934
49	268	357	446	535	623	712	801	890	978	1067	1156
61	306	414	521	628	735	842	949	1056	1163	1270	1377
73	345	470	596	721	846	972	1097	1223	1348	1474	1599
85	383	527	670	814	958	1102	1245	1389	1533	1677	1820
97	421	583	745	907	1069	1231	1394	1556	1718	1880	2042
109	459	640	820	1000	1181	1361	1542	1722	1903	2083	2263
121	497	696	895	1094	1292	1491	1690	1889	2087	2286	2485

Chart 3

	25	37	49	61	73	85	97	109	121	133	145
37	333	425	517	608	700	792	883	975	1067	1158	1250
49	374	485	597	708	819	930	1041	1152	1264	1375	1486
61	415	546	676	807	938	1068	1199	1330	1461	1591	1722
73	456	606	756	906	1057	1207	1357	1507	1658	1808	1958
85	496	666	836	1006	1175	1345	1515	1685	1854	2024	2194
97	537	726	916	1105	1294	1483	1673	1862	2051	2241	2430
109	578	786	995	1204	1413	1622	1831	2039	2248	2457	2666
121	618	847	1075	1303	1532	1760	1988	2217	2445	2674	2902

Chart 4

	25	37	49	61	73	85	97	109	121	133	145
37	287	384	480	577	674	771	867	964	1061	1158	1254
49	339	460	582	704	825	947	1068	1190	1312	1433	1555
61	391	537	684	830	977	1123	1269	1416	1562	1709	1855
73	442	614	785	956	1128	1299	1470	1642	1813	1984	2156
85	494	690	887	1083	1279	1475	1671	1868	2064	2260	2456
97	546	767	988	1209	1430	1651	1873	2094	2315	2536	2757
109	598	844	1090	1336	1582	1828	2074	2319	2565	2811	3057
121	650	921	1191	1462	1733	2004	2275	2545	2816	3087	3358

Chart 5

	25	37	49	61	73	85	97	109	121	133	145
37	332	450	568	686	804	922	1040	1158	1276	1394	1512
49	403	555	706	858	1010	1162	1314	1465	1617	1769	1921
61	473	659	845	1030	1216	1402	1587	1773	1959	2144	2330
73	544	763	983	1202	1422	1642	1861	2081	2300	2520	2739
85	614	868	1121	1375	1628	1881	2135	2388	2642	2895	3148
97	685	972	1259	1547	1834	2121	2408	2696	2983	3270	3558
109	755	1077	1398	1719	2040	2361	2682	3003	3324	3646	3967
121	826	1181	1536	1891	2246	2601	2956	3311	3666	4021	4376

Chart 6

	25	37	49	61	73	85	97	109	121	133	145
37	432	585	738	891	1044	1198	1351	1504	1657	1811	1964
49	523	721	918	1115	1312	1509	1707	1904	2101	2298	2496
61	615	856	1097	1339	1580	1821	2062	2304	2545	2786	3027
73	707	992	1277	1562	1848	2133	2418	2703	2989	3274	3559
85	798	1128	1457	1786	2115	2445	2774	3103	3432	3762	4091
97	890	1263	1637	2010	2383	2756	3130	3503	3876	4249	4623
109	982	1399	1816	2234	2651	3068	3485	3903	4320	4737	5154
121	1073	1535	1996	2457	2919	3380	3841	4302	4764	5225	5686

Privacy Liner

	25	37	49	61	73	85	97	109	121	133	145
37	112	161	210	259	308	357	406	455	504	553	602
49	133	192	251	311	370	429	488	547	606	665	724
61	154	224	293	362	431	500	570	639	708	777	846
73	175	255	334	413	493	572	651	731	810	889	969
85	197	286	375	465	554	644	733	823	912	1002	1091
97	218	317	417	516	616	715	815	915	1014	1114	1213
109	239	348	458	568	677	787	897	1006	1116	1226	1336
121	260	380	499	619	739	859	979	1098	1218	1338	1458

Blackout Liner

	25	37	49	61	73	85	97	109	121	133	145
37	126	180	235	289	343	397	451	505	559	613	667
49	150	216	281	347	412	478	543	609	675	740	806
61	174	251	328	405	482	559	636	713	790	867	944
73	198	286	375	463	552	640	728	817	905	994	1082
85	222	322	421	521	621	721	821	921	1021	1121	1220
97	246	357	468	579	691	802	913	1025	1136	1247	1359
109	269	392	515	638	760	883	1006	1129	1251	1374	1497
121	293	427	562	696	830	964	1098	1233	1367	1501	1635

Surcharge Options

	25	37	49	61	73	85	97	109	121	133	145
TDBU or CCL	103	116	129	142	155	168	182	195	208	221	234

Returns 30
Hand Sewn Rings 50
Wrap Headrail 20
Seam Fabric 55
Dust Cover 15
2 on 1 (Recommended over 96” width) 100
3 on 1 150
3/4” x 3/4” Headrail 10
1-1/2”, or 2-1/2” Headrail .....N/C
3-1/2” up to 5-1/2” Headrail 20
Cut-outs 10/Cut
FR Treatment Max .....$7/sqft or $750
FR Certificate $50
3 day Rush Order $50/shade

Pattern		Price Group	Max Width	Edge Banding	Drapery	Side by Side
Aaya Frost	JZ310	6	144	Yes	Yes	Yes
AayaSnow	JZ300	6	144	Yes	Yes	Yes
Andover Dawn	JZ111	6	144	Yes	Yes	Yes
Andover Oyster	JZ113	6	144	Yes	Yes	Yes
Andover Umber	JZ112	6	144	Yes	Yes	Yes
Arendal Oyster	JB255	4	144	Yes	Yes	Yes
Arendal Slate	JB256	4	144	Yes	Yes	Yes
Aria Champagne	MG370	6	144	Yes	Yes	Yes
Aria Heather	MG380	6	144	Yes	Yes	Yes
Aria Sienna	MG390	6	144	Yes	Yes	Yes
Aria Snow	MG360	6	144	Yes	Yes	Yes
ArisTea	B770	2	96	Yes	Yes	Yes
ArisWheat	B7BO	2	96	Yes	Yes	Yes
Avedon	NV350	4	96	Yes	Yes	No
Bacopa Amber	B750	2	96	Yes	Yes	No
Bacopa Camel	B740	2	96	Yes	Yes	No
Balboa Cork	LS960	2	96	Yes	Yes	Yes
Balboa Soil	LS970	2	96	Yes	Yes	Yes
Bartlett Eggshell	WG920	6	144	Yes	Yes	Yes
Bartlett Latta	WG940	6	144	Yes	Yes	Yes
Bartlett Malt	WG930	6	144	Yes	Yes	Yes
Bartlett Oyster	WG950	6	144	Yes	Yes	Yes
Belden Blonde	SJ330	5	144	Yes	Yes	Yes
Belden Raven	SJ340	5	144	Yes	Yes	Yes
Belmont Dawn	JZ301	6	144	Yes	Yes	Yes
Belmont Oyster	JZ302	6	144	Yes	Yes	Yes
Belmont Sage	JZ303	6	144	Yes	Yes	Yes
Belmont Storm	JZ304	6	144	Yes	Yes	Yes
Bengali Earth	BJ200	5	96	Yes	Yes	Yes
Bengali Mist	BJ220	5	96	Yes	Yes	Yes
Botswana	NV500	2	96	Yes	Yes	No
Bowery Maple	B8650	1	96	Yes	Yes	No
Bowery Moon	B8640	1	96	Yes	Yes	No
Buzan Dusk	JJ401	5	144	Yes	Yes	Yes
Buzen Dawn	JJ402	5	144	Yes	Yes	Yes
Calgary Dawn	JZ135	6	144	Yes	Yes	Yes
Calgary Dusk	JZ137	6	144	Yes	Yes	Yes
Calgary Mist	JZ138	6	144	Yes	Yes	Yes
Calgary Oyster	JZ136	6	144	Yes	Yes	Yes
Cameroon	NV730	3	96	Yes	Yes	No
Chalayan Sea	G020	5	144	Yes	Yes	Yes
Chalayan Wheat	G030	5	144	Yes	Yes	Yes
Claremont Dawn	JJ1BO	5	144	Yes	Yes	Yes
Claremont Mist	JJ182	5	144	Yes	Yes	Yes
Claremont Sage	JJ181	5	144	Yes	Yes	Yes
Claremont Storm	JJ183	5	144	Yes	Yes	Yes
Clssus	T180	3	96	No	No	No
Cocos	J450	5	144	Yes	Yes	Yes
Daisen Dawn	JZ331	6	144	Yes	Yes	Yes
Dalsen Snow	JZ330	6	144	Yes	Yes	Yes
Dalsen Snow	JZ330	6	144	Yes	Yes	Yes
Delphi Umber	JJ541	3	96	Yes	Yes	No
Delphi Umber	JJ541	3	96	Yes	Yes	No
Easton Beige	JJ171	5	144	Yes	Yes	Yes
Easton Beige	JJ171	5	144	Yes	Yes	Yes
Easton Dawn	JJ170	5	144	Yes	Yes	Yes
Easton Dawn	JJ170	5	144	Yes	Yes	Yes
Easton Dusk	JJ172	5	144	Yes	Yes	Yes
Easton Dusk	JJ172	5	144	Yes	Yes	Yes
Ferra Camel	88122	1	96	Yes	Yes	No

Pattern		Price Group	Max Width	Edge Banding	Drapery	Side by Side
Ferra Camel	88122	1	96	Yes	Yes	No
Ferra Hill	88121	1	96	Yes	Yes	No
Ferra Hill	88121	1	96	Yes	Yes	No
Florence Dawn	JJ220	6	144	Yes	Yes	Yes
Florence Dawn	JJ220	6	144	Yes	Yes	Yes
Florence Dusk	JJ221	6	144	Yes	Yes	Yes
Florence Dusk	JJ221	6	144	Yes	Yes	Yes
Frankfurt Camel	JJ601	4	96	Yes	Yes	Yes
Frankfurt Camel	JJ601	4	96	Yes	Yes	Yes
Frankfurt Cocoa	JJ600	4	96	Yes	Yes	Yes
Frankfurt Cocoa	JJ600	4	96	Yes	Yes	Yes
Galine Dawn	GG720	6	144	Yes	Yes	Yes
Galine Dawn	GG720	6	144	Yes	Yes	Yes
Galine Espresso	GG740	6	144	Yes	Yes	Yes
Galine Espresso	GG740	6	144	Yes	Yes	Yes
Galine Moon	GG710	6	144	Yes	Yes	Yes
Galine Moon	GG710	6	144	Yes	Yes	Yes
Galine Sterling	GG730	6	144	Yes	Yes	Yes
Galine Sterling	GG730	6	144	Yes	Yes	Yes
Gibson Dusk	JZ122	6	144	Yes	Yes	Yes
Gibson Dusk	JZ122	6	144	Yes	Yes	Yes
Gibson Mist	JZ123	6	144	Yes	Yes	Yes
Gibson Mist	JZ123	6	144	Yes	Yes	Yes
Gibson Sage	JZ121	6	144	Yes	Yes	Yes
Gibson Sage	JZ121	6	144	Yes	Yes	Yes
Goya Dawn	MO10	5	144	Yes	Yes	Yes
Goya Dusk	M020	5	144	Yes	Yes	Yes
GoyaWheat	M050	5	144	Yes	Yes	Yes
Guinea Gold	NV410	2	96	Yes	Yes	Yes
Guinea Grass	NV411	2	96	Yes	Yes	Yes
Guinea Rouge	NV412	2	96	Yes	Yes	Yes
Gumanti	LJ520	4	96	No	No	No
Hampton Dawn	NV810	5	144	Yes	Yes	Yes
Hampton Dusk	NV820	5	144	Yes	Yes	Yes
Hampton Olive	NV830	5	144	Yes	Yes	Yes
Hayes Cream	MM570	4	96	Yes	Yes	Yes
Hayes Ginger	MM580	4	96	Yes	Yes	Yes
Hayes Stone	MM590	4	96	Yes	Yes	Yes
Hoku Mist	M150	4	96	Yes	Yes	Yes
Hoya Beige	D860	2	96	Yes	Yes	Yes
HoyaCamel	D870	2	96	Yes	Yes	Yes
Hyde Ash	WS370	2	96	Yes	Yes	No
Hyde Mushroom	WS350	2	96	Yes	Yes	No
Hyde Sienna	WS360	2	96	Yes	Yes	No
Juba	J840	3	96	Yes	Yes	No
Kahle Mist	8830	3	96	Yes	Yes	Yes
Kipling Dove	KX650	6	144	Yes	Yes	Yes
Kipling Heather	KX660	6	144	Yes	Yes	Yes
Kipling Slate	KX670	6	144	Yes	Yes	Yes
Korsia Cocoa	JJ612	5	144	Yes	Yes	Yes
Korsia Grove	JJ610	5	144	Yes	Yes	Yes
Korsia Umber	JJ611	5	144	Yes	Yes	Yes
Larkin Dawn	SB110	2	96	Yes	Yes	Yes
Larkin Dusk	SB120	2	96	Yes	Yes	Yes
Larkin Mist	SB130	2	96	Yes	Yes	Yes
Ibiza Sand	JJ550	4	96	Yes	Yes	Yes
Lenox Dawn	MJ200	5	144	Yes	Yes	Yes
Lenox Slate	MJ201	5	144	Yes	Yes	Yes
Lexington Haze	MM680	4	96	Yes	Yes	No
Lexington Terra	MM690	4	96	Yes	Yes	No

Pattern		Price Group	Max Width	Edge Banding	Drapery	Side by Side
Libya	NV680	3	96	Yes	Yes	No
Liyama Eve	SB767	3	96	Yes	Yes	Yes
Imari Dusk	JJ501	5	96	Yes	Yes	Yes
Imari Umber	JJ502	5	96	Yes	Yes	Yes
Lombard Rust	MB220	3	96	Yes	Yes	No
Lombard Sage	MB230	3	96	Yes	Yes	No
Isamu Dusk	88202	2	96	Yes	Yes	No
Isamu Umber	88203	2	96	Yes	Yes	No
Mali Cocoa	NV403	1	96	Yes	Yes	Yes
Mali Grass	NV402	1	96	Yes	Yes	Yes
Malta Camel	BP560	3	96	Yes	Yes	No
Malta Cocoa	BP561	3	96	Yes	Yes	No
Marbella Dawn	JJ210	6	144	Yes	Yes	Yes
Marbella Mist	JJ212	6	144	Yes	Yes	Yes
Marbella Oyster	JJ211	6	144	Yes	Yes	Yes
Milan Mist	JJ230	4	144	Yes	Yes	Yes
Milan Slate Green	JJ232	4	144	Yes	Yes	Yes
Milan Storm	JJ231	4	144	Yes	Yes	Yes
MiroDawn	M1 00	4	96	Yes	Yes	Yes
Miyazaki	GG701	5	144	Yes	Yes	Yes
Mogu Snow	NV200	4	96	Yes	Yes	Yes
Mohave Umber	J790	4	96	Yes	Yes	No
Montg. Bleach	MG160	6	144	Yes	Yes	Yes
Montg. Copper	MG180	6	144	Yes	Yes	Yes
Montgomery Flax	MG170	6	144	Yes	Yes	Yes
Moraga Hazel	SJ460	5	144	Yes	Yes	Yes
Moraga Russet	SJ470	5	144	Yes	Yes	Yes
Nairobi	LP390	3	96	No	No	No
O'tahiti Maple	B300	1	96	Yes	Yes	Yes
O'tahiti Oak	B320	1	96	Yes	Yes	Yes
O'tahitiWh.Wash	B310	1	96	Yes	Yes	Yes
Omo Dune	MM890	6	144	Yes	Yes	Yes
Omo Oyster	MM880	6	144	Yes	Yes	Yes
Omo Pearl	MM870	6	144	Yes	Yes	Yes
Orsay	LJ510	3	96	No	No	No
Otsuki	JW350	6	96	No	No	No
Ozu Dawn	JW340	6	96	No	No	No
Ozu Eve	JW341	6	96	No	No	No
Palermo Dusk	JJ162	5	144	Yes	Yes	Yes
Palermo Mist	JJ161	5	144	Yes	Yes	Yes
Palermo Slate	JJ160	5	144	Yes	Yes	Yes
Parma Stone	JL801	3	96	No	No	No
Phoenix Dawn	BJ150	4	144	Yes	Yes	Yes
Phoenix Mist	BJ152	4	144	Yes	Yes	Yes
Phoenix Olive	BJ153	4	144	Yes	Yes	Yes
Phoenix Sand	BJ151	4	144	Yes	Yes	Yes
Portola Granite	JM990	3	96	Yes	Yes	Yes
Portola Khaki	JM980	3	96	Yes	Yes	Yes
Rattan Jute	J250	3	96	Yes	Yes	Yes
Rumoi Dusk	JZ361	6	144	Yes	Yes	Yes
RumoiDawn	JZ360	6	144	Yes	Yes	Yes
Sakura	BY725	5	96	Yes	Yes	Yes
Sasarido Beige	J800	5	144	Yes	Yes	Yes
Sasarido Ebony	J820	5	144	Yes	Yes	Yes
Sasarido Umber	J810	5	144	Yes	Yes	Yes
Seville Beige	JJ190	4	144	Yes	Yes	Yes
Seville Dusk	JJ193	4	144	Yes	Yes	Yes
Seville Mist	JJ192	4	144	Yes	Yes	Yes
Seville Sage	JJ191	4	144	Yes	Yes	Yes
Shizen Beige	JJ102	6	144	Yes	Yes	Yes

Pattern		Price Group	Max Width	Edge Banding	Drapery	Side by Side
Shizen Dawn	JJ101	6	144	Yes	Yes	Yes
Shizen Dusk	JJ105	6	144	Yes	Yes	Yes
Shizen Mist	JJ104	6	144	Yes	Yes	Yes
Sierra Leone	NV470	3	96	Yes	Yes	No
Sloan Amber	RD230	1	96	Yes	Yes	Yes
Sloan Frost	RD220	1	96	Yes	Yes	Yes
Sloan Mink	RD210	1	96	Yes	Yes	Yes
Sloan Russet	RD200	1	96	Yes	Yes	Yes
Srilanka Beige	J470	5	144	Yes	Yes	Yes
Srilanka Dance	J290	5	144	Yes	Yes	Yes
Srilanka Da.White	J270	5	144	Yes	Yes	Yes
Srilanka Da.Yellow	J270	5	144	Yes	Yes	Yes
Srilanka Dusk	J280	5	144	Yes	Yes	Yes
Srilanka Earth	JJ310	5	144	Yes	Yes	Yes
Srilanka Miele	JJ320	5	96	Yes	Yes	Yes
Srilanka Mink	JJ330	5	144	Yes	Yes	Yes
Srilanka Mist	JJ300	5	144	Yes	Yes	Yes
Srilanka Sienna	JJ340	5	144	Yes	Yes	Yes
Srilanka Storm	JJ350	5	144	Yes	Yes	Yes
Steffe Sea	NV020	4	96	Yes	Yes	Yes
Sudan	NV490	3	96	Yes	Yes	No
Sumo Camel	JB600	3	96	Yes	Yes	No
Sumo Cocoa	JB601	3	96	Yes	Yes	No
Sumo Ebony	JB602	3	96	Yes	Yes	No
Tanuka Frost	JZ380	6	144	Yes	Yes	Yes
Tanzania	NV450	3	96	Yes	Yes	Yes
Tiran	J460	5	144	Yes	Yes	Yes
Tivoli Dawn	JB250	5	144	Yes	Yes	Yes
Tivoli Dusk	JB253	5	144	Yes	Yes	Yes
Tivoli Olive	JB252	5	144	Yes	Yes	Yes
Tivoli Sand	JB251	5	144	Yes	Yes	Yes
Tokai Dawn	JZ351	6	144	Yes	Yes	Yes
Tokai Dusk	JZ350	6	144	Yes	Yes	Yes
Tokai Umber	JZ352	6	144	Yes	Yes	Yes
Ukiha	JZ332	6	144	Yes	Yes	No
Valencia Bone	JG800	6	144	Yes	Yes	Yes
Valencia Henna	JGB30	6	144	Yes	Yes	Yes
Valencia Oatmeal	JG810	6	144	Yes	Yes	Yes
Valencia Willow	JG820	6	144	Yes	Yes	Yes
Varvatos Umber	BJ310	3	96	No	No	No
Verona Dawn	JJ240	5	144	Yes	Yes	Yes
Verona Oyster	JJ241	5	144	Yes	Yes	Yes
Verona Slate	JJ242	5	144	Yes	Yes	Yes
Verona Storm	JJ243	5	144	Yes	Yes	Yes
Warhol Umber	BJ410	4	96	No	No	No
Waverly Dawn	88710	4	96	Yes	Yes	Yes
Waverly Moon	88700	4	96	Yes	Yes	Yes
Waverly Night	88730	4	96	Yes	Yes	Yes
Waverly Sage	88720	4	96	Yes	Yes	Yes
Windsor Dawn	JZ141	6	144	Yes	Yes	Yes
Windsor Malt	JZ142	6	144	Yes	Yes	Yes
Windsor Mist	JZ143	6	144	Yes	Yes	Yes
Yaizu Dawn	JZ370	6	144	Yes	Yes	No
Yaizu Dusk	JZ372	6	144	Yes	Yes	No
Yalzu Sand	JZ371	6	144	Yes	Yes	No
Z8gna Grass	NV310	4	96	Yes	Yes	Yes
zegnaCocoa	NV300	4	96	Yes	Yes	Yes

Tableaux

Single Side Carving..... 62.50/sq ft rounded up*

Framed Single Side Carving ..... 85.50/sq ft rounded up*

Choose from any Paramont Shutter Frame, Paint or Stain

Double Side Carving 20%

Snug Seal 20%

Solar Screen Backing 40%

Rush 5 Day/10 Day ..... 20% / 40%

Custom Design Work**..... 200/hr

FR Surcharge 20%

Freight..... 7.5/sq ft

Crate..... 150

Oversized Crate..... 375

- Minimum piece size is 4 square feet.
- Hardware: Lateral Set Screws, Direct Set Screws, Hinges & Magnets, Rails for unsupported Spans of 36" or more. Ceiling Mount, Picture Hanger
- Material Thickness: 3/8", 1/2" & 3/4" (3/4" only available for outside use.
- Size Limitations: 60"x120" 3/4" Tableaux, 48"x96" 3/8" & 1/2" Material, 48"x96" 3/4" outside use, Double sided will reduce size limitations "a little bit."

* Price for each piece is determined by (max width X max height / 144 rounded up to the nearest whole number then multiplied by the sqft cost.
** Custom design work is only done when requested for extraordinary work. Redesign work does not apply unless something extra special is requested. Custom design work will never be a surprise.

Tableaux™

Caswell Roman Shades

Styles

Soft Fold

	Min	Max
Width	12"	120"
Length	16"	120"

Plain Classic

	Min	Max
Width	12"	120"
Length	16"	120"

Flat Fold

	Min	Max
Width	12"	120"
Length	16"	120"

European

	Min	Max
Width	30"	120"
Length	16"	120"

Front Slat

	Min	Max
Width	12"	48"
Length	16"	120"

Control Options

Standard control is cord locks on back with no valance (pictured above)

Cords Forward

(CCL) Continuous Cord Loop (IM)

Continuous Cord Loop (OB)

Specify pastic or metal chain

Cordless

TDBU

Edge Banding

White

Ivory

Taupe

Grey

Navy

Burgundy

Gold

Black

Caswell Roman Shades - Price Group "A" Grids - "B" Add 17%, "C" add 35%, "D" add 45%

Flat Fold Roman Shades

	24	30	36	42	48	54	60	66	72	78	84	90	96	120
36	239	231	226	224	225	331	338	349	341	357	367	354	381	527
42	237	234	233	234	238	346	356	368	351	369	390	378	405	553
48	240	241	244	248	255	365	366	379	374	392	414	402	430	579
54	248	253	258	265	273	375	387	402	397	416	438	427	455	605
60	258	266	274	283	283	396	409	424	420	439	462	450	479	632
66	269	280	291	302	303	417	430	446	442	462	485	473	503	660
72	281	295	308	310	322	437	451	467	463	483	507	496	526	689
78	294	311	325	328	341	457	471	487	484	504	528	518	550	720
84	307	326	332	346	360	476	490	507	504	525	550	541	574	753
90	321	341	348	364	378	494	509	525	523	545	571	564	599	789
96	334	346	365	380	395	511	527	544	542	565	593	587	624	827
120	377	404	425	442	458	576	594	615	619	650	687	692	742	997

Plaine or European Roman Shades

	24	30	36	42	48	54	60	66	72	78	84	90	96	120
36	267	258	252	249	250	370	377	388	383	400	411	396	425	582
42	266	262	260	261	264	387	396	409	394	413	436	421	451	609
48	271	271	272	276	282	407	407	421	418	438	461	448	478	637
54	279	283	288	294	302	418	430	445	443	463	487	473	504	665
60	290	297	305	313	312	440	453	468	466	487	511	498	529	693
66	302	312	322	333	333	461	475	491	490	511	535	522	554	722
72	315	328	340	341	353	482	497	513	512	533	558	546	578	752
78	328	344	358	360	373	503	518	534	533	555	580	569	603	785
84	342	360	365	379	392	522	537	554	554	576	603	593	628	820
90	356	376	382	397	411	541	557	574	574	597	625	617	653	858
96	370	381	399	414	429	559	575	593	594	618	647	641	680	898
120	414	440	461	478	494	626	645	667	674	706	745	751	804	1,080

Soft Fold Roman Shades

	24	30	36	42	48	54	60	66	72	78	84	90	96	120
36	304	292	283	280	280	423	432	446	430	453	467	445	482	678
42	307	300	297	297	301	448	460	475	449	474	502	482	519	718
48	315	314	315	319	326	475	477	494	483	508	538	518	557	758
54	327	330	335	342	352	491	507	526	516	542	573	554	593	798
60	341	349	357	367	366	520	537	558	548	575	606	588	628	836
66	357	368	380	392	393	549	567	588	579	607	639	622	662	875
72	374	388	402	404	420	576	595	617	609	638	670	654	695	914
78	391	408	425	429	445	603	623	645	638	667	700	685	728	955
84	408	428	434	452	470	629	649	672	666	696	730	716	760	998
90	425	448	456	475	494	653	675	698	692	724	759	747	793	1,043
96	442	455	477	498	517	677	699	724	719	751	788	778	827	1,089
120	497	530	557	580	603	765	790	820	821	862	909	911	973	1,291

Edge Banding

	24	30	36	42	48	54	60	66	72	78	84	90	96	120
36	168	168	168	168	169	186	187	189	215	218	212	229	236	280
42	169	175	179	183	186	205	208	211	227	231	235	251	258	299
48	177	187	195	202	207	228	221	224	251	254	258	273	279	317
60	202	220	234	245	242	263	267	269	295	297	299	313	317	352
66	218	239	255	266	264	285	288	290	314	315	317	330	334	370
72	234	258	275	277	284	305	308	308	332	332	333	347	350	390
78	251	277	295	297	304	324	326	326	349	349	349	363	367	412
84	268	295	304	316	323	342	343	342	364	364	365	379	384	435
90	284	313	322	334	340	358	358	357	379	379	380	395	402	458
96	301	320	340	351	356	374	373	371	393	394	396	412	420	481
120	352	383	401	409	411	426	425	425	450	456	464	486	498	521

Front Slat

	24	30	36	42	48
36	276	284	292	303	316
42	284	295	306	317	330
48	298	312	323	334	347
54	316	331	342	352	364
60	335	351	361	370	385
66	355	371	380	389	403
72	374	390	398	409	422
78	393	408	416	427	442
84	411	425	435	446	462
90	429	442	453	464	483
96	445	460	470	483	504
120	507	522	539	558	566

Surcharge Options

Width	36	48	72	96	120
CCL	134	180	180	222	353
Cordless	120	120	145	145	145

Price Group "B" Fabrics 17%
Price Group "C" Fabrics 35%
Price Group "D" Fabrics 45%

Standard Liner.....Incl.
Thermal Sateen Lining.....15%
Room Darkening Lining.....25%
Premium Blackout Lining.....30%

Cords Forward.....49
Top-Down / Bottom-Up.....113
2-on-1 Headrail 67
Oversized Roman Freight (>96" Wide)..229
Up-Ended Headrail .....NC
(N/A CCO, TDBU or Cordless)

NOTE: Percent surcharges apply only to the Price Group A shade price grid and not additional surcharges.

How to Price:
(Grid Price)
+ (Grid Price x Fabric Group Surcharge)
+ (Grid Price x Liner Surcharge)
+ Any Additional Option Surcharges
= Total Retail Cost of Shade

Fabric Name	Price Group	Available Cordless	Width	Composition	Approximate Repeat
AMAGANSETT - Mod Floral	A	√	54"	100% Cotton	27"H x 25.25"V
ASHTON STRIPE - Poly Awing Stripe	A	√	54"	100% Polyester	3.5"H
BERMUDA - Plisse Scroll	B	√	53"	64% Polyester/36% Cotton	13.25"H x 18.5"V
CAMELOT - Silkesse	A	√	54"	100% Polyester	N/A
CAPTIVA - Sandrift Texture	B	√	54"	59% Cotton/41% Polyester	N/A
CHARLESTON - Bandana Floral	B	√	54"	100% Cotton	18"H x 18.25"V
CHENILLE DAMASK	C		54"	100% Polyester	13.75"H X 14.5"V
CREPE SHEERS -	A		118"	100% Polyester	N/A
DONETTA - Ironwork Print	C	√	54"	100% Cotton	6"H x 6.75"V
ESSENCE - Damask	C		54"	75% Rayon/25% Polyester	13.5"H x 25.25"V
FARRELL PRINT - Country Blossom	A	√	54"	100% Cotton	27"H x 12.625"V
FERGUS - Linen Stripe	D		54"	100% Linen	6.75"H
FINDLAY - All Over Willow	C		54"	55% Linen/45% Rayon	13.5"H x 13.5"V
FULL CIRCLE - Circle Matelasse	C		57"	61% Cotton/39% Polyester	1.25"H x 1.25"V
GENOVA - Ogee Embroidery	D	√	54"	Polyester embro.on 70% Cotton/30% Polyester	2.5"H x 4.5"V
GENT - Linen Blend Solid	C		54"	70% Rayon/30% Linen	N/A
HARRISON STRIPE - Relaxed Stripe	B	√	54"	57% Polyester/43% Cotton	7.1875"H
HELMSLEY - Lattice Embroidery	B		53"	Rayon embroidery on 100% Natural Cotton Duck	7.75"H x 7.75"V
HERRINGBONE - Herringbone Twill	A		62"	100% Polyester	N/A
Ikat Ombre Horizontal Stripe	B		54"	59% Rayon/41% Polyester	1.75"H X 14"V
IMARI - Flower Power Print	B	√	54"	100% Cotton	27"H x 12.625"V
KITANI - Y Print	B	√	54"	100% Cotton	6.75"H x 8.375"V
LEXI - Flannel	B	√	54"	100% Polyester	N/A
LUCKY - Cotton Sateen	A	√	54"	100% Cotton	N/A
LYON - Floating Vine	A	√	54"	100% Polyester	4.75"H x 5"V
MADISON - Cotton Candlewicking	A	√	54"	57% Cotton/42% Polyester	6"H x 7.625"V
MATRIX - Plush Trellis	C		54"	56% Rayon/44% Polyester	1.5"H x 1.5"V
MELODIE - Toile Paisley	C		54"	55% Linen/45% Rayon	18"H X 18"V
META - Cabana Stripe	B	√	54"	63% Rayon/37% Polyester	7"H
MISTY SHEERS - Semi Opaque Sheer	A		118"	100% Polyester	N/A
MOOREA - Flock Leaf	B	√	54"	100% Polyester with 100% Nylon Flock	13.5"H x 25.5"V
NEPTUNE - Poly Brocade	B		54"	100% Polyester	13"H x 13"V
ORLANDO - Braid Jacquard	C	√	58"	100% Polyester	7"H x 8"V
PARMA - Paisley Embroidery	D		54"	Rayon embroidery on 100% Polyester	15.5"H x 12.5"V
POLARIS - Asymmetrical Stripe	B	√	54"	100%Polyester	4.875"H
RAW SILK CREPE	B	√	60"	100% Polyester	N/A
REGAL SQUARE - Square Dot	B	√	60"	55% Cotton/45% Polyester	2.5"H x 2.5"V
RIO - Faux Linen	A	√	54"	100% Polyester	N/A
SILK ROAD - Reeded Silk Stripe	A	√	54"	100% Polyester	N/A
SILKARA - Shimmery Crosshatch	B	√	54"	100% Polyester	N/A
SPECIES - animal jacquard	C	√	54"	100% Polyester	14.5"H x 13"V
SRI LANKA - Tribal Print	A	√	54"	100% Cotton	6.75"H x 9"V
ST. MORITZ - Stainglass Floral	B	√	54"	100% Cotton	27"H x 27"V
TROIKA - Formal Cabana Stripe	C		54"	100% Polyester	7" H
Tullahoma - Ikat Print	A	√	54"	100% Cotton	27"H x 13.5"V
TULSA - Matka Silk	B		54"	100% Polyester	N/A
UMA - Raffia Texture	B		54"	100% Polyester	N/A
VALDOSTA - Jacobean Print	C		54"	55% Linen/45% Rayon	25.75"H x 27.25"V
VOILE SHEERS -	A		118"	100% Polyester	N/A
WATERLOO DOT - Ditzy Dot	B		54"	71% Polyester/29% Viscose	0.375"H x 0.375"V
WILMINGTON - Cotton Duck	A	√	53"	100% cotton	N/A
PREMIUM BLACKOUT LINING Surcharge		√	54"	100% Polyester with 3 pass acrylic latex foam	N/A
ROOM DARKENING LINING Surcharge			54"	100% Polyester	N/A
STANDARD LINING Standard		√	54"	70% Polyester/30% Cotton	N/A
THERMAL SATEEN LINING Surcharge			54"	100% Polyester with 1 pass acrylic latex foam	N/A

Caswell Custom Drapery

Styles

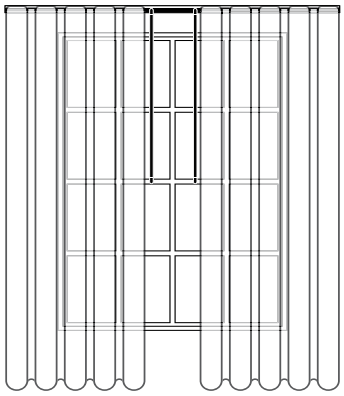

Rippled Soft Wave 4" or 6"

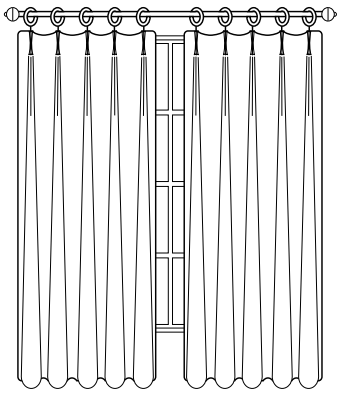

Parisian Pleated 3"

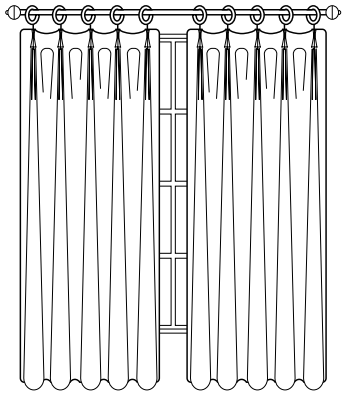

Classic Pleated

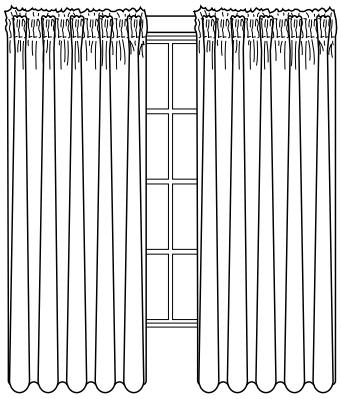

Rod Pocket

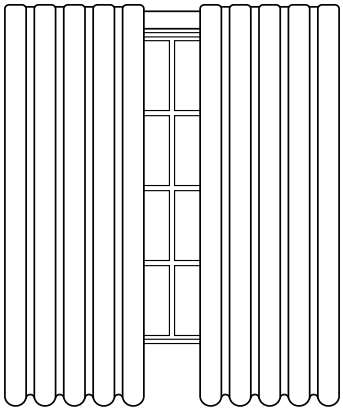

Back Tab

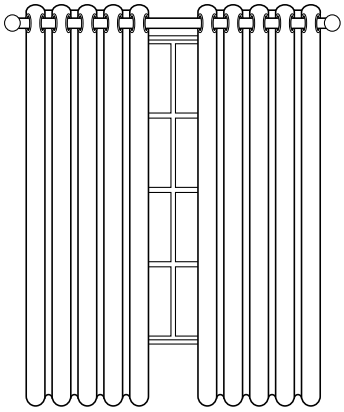

Grommet

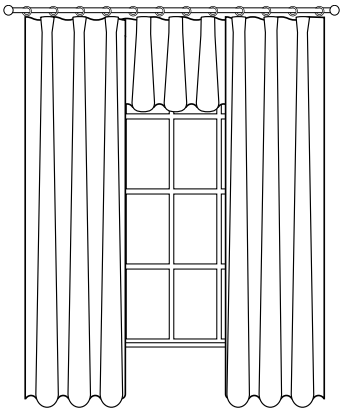

Ring Top

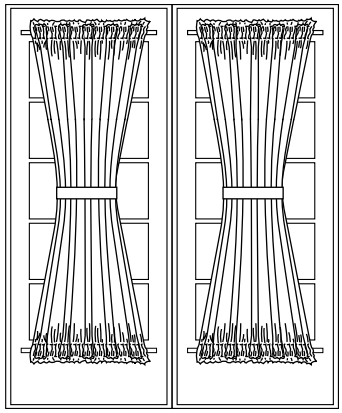

Sheer Door Panels

Fabric Price Group Surcharges

Price Group "A" Fabrics .....Included in price grids
Price Group "B" Fabrics 17%
Price Group "C" Fabrics 35%
Price Group "D" Fabrics 45%

Standard Lining .....Included
Thermal Sateen Lining.....15%
Room Darkening Lining.....25%
Premium Blackout Lining.....30%

NOTE: Percent surcharges apply ONLY to the Price Group A Grid Price and not additional surcharges.

How to Price:
(Grid Price)
+ (Grid Price x Fabric Group Surcharge)
+ (Grid Price x Liner Surcharge)
+ Any Additional Option Surcharges
= Total Retail Cost of Shade

Caswel Custom Drapery

Note about Stack: Stack can vary widly based on tracks, liners and panel types. Please use professional judgment to consider that stack will usually be between 10% and 20% of the full drapery width.

Ripple Fold (One Way / Two Way) - Price Group A

	32	45	59	72	86	104	118	145	172	208
24	236/374	288/374	344/446	396/554	452/554	525/663	663	771	879	1,024
36	261/410	323/410	391/496	453/626	520/626	606/755	755	885	1,015	1,187
48	286/446	359/446	437/547	510/697	588/697	688/848	848	999	1,150	1,351
60	311/482	394/482	483/597	566/769	655/769	770/941	941	1,113	1,285	1,514
72	336/518	430/518	530/647	623/841	723/841	852/1034	1,034	1,227	1,420	1,678
84	362/555	465/555	576/698	679/912	791/912	934/1127	1,127	1,341	1,556	1,842
96	387/591	500/591	623/748	736/984	858/984	1015/1219	1,219	1,455	1,691	2,005
108	412/627	536/627	669/798	793/1055	926/1055	1097/1312	1,312	1,569	1,826	2,169
120	437/663	571/663	715/849	849/1127	993/1127	1179/1405	1,405	1,683	1,961	2,332

*Pair Required Over104"inWidth, 80% Fullness, White Track Included in Price

Parisian Pleat (Single Panel / Pair) - Price Group A

	24	36	48	60	72	84	96	120	144	168	192
24	113/226	161/226	209/226	257/322	306/322	354/419	402/419	515	611	707	804
30	122/245	175/245	228/245	281/351	334/351	387/456	440/456	562	668	773	879
36	132/264	189/264	247/264	305/379	362/379	420/494	477/494	609	724	840	955
45	146/292	211/292	275/292	340/421	405/421	469/551	534/551	680	809	939	1,068
54	160/320	232/320	304/320	375/464	447/464	519/607	591/607	751	894	1,038	1,181
63	174/349	253/349	332/349	411/506	490/506	568/664	647/664	822	979	1,137	1,294
72	188/377	274/377	360/377	446/549	532/549	618/721	704/721	892	1,064	1,236	1,408
84	207/415	303/415	398/415	493/605	589/605	684/796	779/796	987	1,177	1,368	1,559
96	226/452	331/452	436/452	541/662	645/662	750/871	855/871	1,081	1,291	1,500	1,710
108	245/490	359/490	473/490	588/719	702/719	816/947	930/947	1,175	1,404	1,632	1,861
120	264/528	388/528	511/528	635/775	759/775	882/1022	1006/1022	1,270	1,517	1,764	2,012
140	295/591	435/591	574/591	714/870	853/870	992/1148	1132/1148	1,427	1,706	1,984	2,263
160	327/654	482/654	637/654	792/964	947/964	1102/1274	1257/1274	1,584	1,894	2,205	2,515
180	358/717	529/717	700/717	871/1058	1042/1058	1212/1400	1383/1400	1,742	2,083	2,425	2,766
200	390/780	576/780	763/780	949/1153	1136/1153	1322/1526	1509/1526	1,899	2,272	2,645	3,018

*Pair Required Over 96" in Width

Rod Pocket (Single Panel / Pair) - Price Group A

	24	36	48	60	72	84	96	120	144	168	192
24	73/146	121/146	169/146	217/242	266/242	314/339	362/339	435	531	627	724
30	82/165	135/165	188/165	241/271	294/271	347/376	400/376	482	588	694	799
36	92/184	149/184	207/184	265/299	322/299	380/414	437/414	529	644	760	875
45	106/212	171/212	235/212	300/341	365/341	429/471	494/471	600	729	859	988
54	120/240	192/240	264/240	335/384	407/384	479/527	551/527	671	814	958	1,101
63	134/269	213/269	292/269	371/426	450/426	528/584	607/584	742	899	1,057	1,214
72	149/297	234/297	320/297	406/469	492/469	578/641	664/641	812	984	1,156	1,328
84	167/335	263/335	358/335	453/525	549/525	644/716	739/716	907	1,097	1,288	1,479
96	186/372	291/372	396/372	501/582	605/582	710/792	815/792	1,001	1,211	1,420	1,630
108	205/410	319/410	434/410	548/639	662/639	776/867	890/867	1,095	1,324	1,552	1,781
120	224/448	348/448	471/448	595/695	719/695	842/943	966/943	1,190	1,437	1,684	1,932
140	255/511	395/511	534/511	674/790	813/790	952/1068	1092/1068	1,347	1,626	1,905	2,183
160	287/574	442/574	597/574	752/884	907/884	1062/1194	1217/1194	1,504	1,815	2,125	2,435
180	318/637	489/637	660/637	831/978	1002/978	1172/1320	1343/1320	1,662	2,003	2,345	2,686
200	350/700	536/700	723/700	909/1073	1096/1073	1283/1446	1469/1446	1,819	2,192	2,565	2,938

*Pair Required Over 96" in Width

Grommet Panel (Single Panel / Pair) - Price Group A

	25	38	50	63	75	88	100	125	150	175	200
24	62/124	112/124	162/124	212/224	262/224	313/324	363/324	425	525	625	725
30	72/143	127/143	182/143	237/253	292/253	347/364	402/364	474	584	694	804
36	81/163	141/163	201/163	261/283	321/283	381/403	441/403	523	643	763	883
45	96/192	164/192	231/192	298/327	366/327	433/462	500/462	597	731	866	1,001
54	111/222	186/222	260/222	335/371	410/371	485/521	559/521	670	820	969	1,119
63	126/251	208/251	290/251	372/416	454/416	536/580	618/580	744	908	1,072	1,237
72	140/281	230/281	319/281	409/460	498/460	588/639	677/639	818	997	1,176	1,355
84	160/320	259/320	359/320	458/519	557/519	657/717	756/717	916	1,115	1,313	1,512
96	180/360	289/360	398/360	507/578	616/578	725/796	835/796	1,014	1,233	1,451	1,669
108	199/399	318/399	437/399	556/637	675/637	794/875	913/875	1,113	1,351	1,588	1,826
120	219/438	348/438	477/438	605/696	734/696	863/953	992/953	1,211	1,469	1,726	1,984
140	252/504	397/504	542/504	687/794	833/794	978/1084	1123/1084	1,375	1,665	1,955	2,246
160	285/569	446/569	608/569	769/892	931/892	1092/1215	1254/1215	1,539	1,862	2,185	2,508
180	317/635	495/635	673/635	851/991	1029/991	1207/1347	1385/1347	1,702	2,058	2,414	2,770
200	350/700	544/700	739/700	933/1089	1127/1089	1322/1478	1516/1478	1,866	2,255	2,643	3,032
*Pair Required Over100" in Width											

Back Tab (Single Panel / Pair) - Price Group A

	25	38	50	63	75	88	100	125	150	175	200
24	74/149	125/149	175/149	225/249	275/249	325/349	375/349	450	550	650	751
30	84/168	139/168	194/168	249/279	304/279	360/389	415/389	499	609	719	829
36	94/188	154/188	214/188	274/308	334/308	394/428	454/428	548	668	788	908
45	109/218	176/218	244/218	311/352	378/352	446/487	513/487	622	756	891	1,026
54	124/247	198/247	273/247	348/397	422/397	497/546	572/546	695	845	994	1,144
63	138/277	220/277	302/277	385/441	467/441	549/605	631/605	769	933	1,098	1,262
72	153/306	242/306	332/306	421/485	511/485	600/664	690/664	843	1,022	1,201	1,380
84	173/345	272/345	371/345	471/544	570/544	669/743	768/743	941	1,140	1,338	1,537
96	192/385	301/385	411/385	520/603	629/603	738/821	847/821	1,039	1,258	1,476	1,694
108	212/424	331/424	450/424	569/662	688/662	807/900	926/900	1,138	1,376	1,614	1,851
120	232/463	360/463	489/463	618/721	747/721	876/978	1004/978	1,236	1,494	1,751	2,009
140	264/529	410/529	555/529	700/819	845/819	990/1110	1135/1110	1,400	1,690	1,981	2,271
160	297/594	459/594	620/594	782/917	943/917	1105/1241	1266/1241	1,564	1,887	2,210	2,533
180	330/660	508/660	686/660	864/1016	1042/1016	1220/1372	1398/1372	1,728	2,083	2,439	2,795
200	363/725	557/725	751/725	946/1114	1140/1114	1334/1503	1529/1503	1,891	2,280	2,669	3,057
*Pair Required Over 100" in Width											

Ring Top (Single Panel / Pair) - Price Group A

	25	38	50	63	75	88	100	125	150	175	200
24	9/17	59/17	109/17	159/118	209/118	259/218	310/218	318	418	519	619
30	18/37	73/37	129/37	184/147	239/147	294/257	349/257	367	477	588	698
36	28/57	88/57	148/57	208/176	268/176	328/296	388/296	416	536	656	776
45	43/86	110/86	178/86	245/221	312/221	380/355	447/355	490	625	760	894
54	58/116	132/116	207/116	282/265	357/265	431/414	506/414	564	713	863	1,012
63	72/145	155/145	237/145	319/309	401/309	483/473	565/473	638	802	966	1,130
72	87/174	177/174	266/174	356/353	445/353	535/532	624/532	711	890	1,069	1,248
84	107/214	206/214	305/214	405/412	504/412	603/611	703/611	810	1,008	1,207	1,405
96	127/253	236/253	345/253	454/471	563/471	672/690	781/690	908	1,126	1,344	1,563
108	146/292	265/292	384/292	503/530	622/530	741/768	860/768	1,006	1,244	1,482	1,720
120	166/332	295/332	423/332	552/589	681/589	810/847	939/847	1,104	1,362	1,620	1,877
140	199/397	344/397	489/397	634/688	779/688	924/978	1070/978	1,268	1,559	1,849	2,139
160	231/463	393/463	555/463	716/786	878/786	1039/1109	1201/1109	1,432	1,755	2,078	2,401
180	264/528	442/528	620/528	798/884	976/884	1154/1240	1332/1240	1,596	1,952	2,308	2,664
200	297/594	491/594	686/594	880/982	1074/982	1269/1371	1463/1371	1,760	2,148	2,537	2,926
*Pair Required Over 100" in Width											

Standard (Non-precise Width) Panels

Parisian Pleat - Price Group A

	24	36	48	60	72	84	96
24	110	158	206	255	303	351	399
30	120	172	225	278	331	384	437
36	129	187	244	302	359	417	474
45	143	208	272	337	402	466	531
54	157	229	301	372	444	516	588
63	171	250	329	408	487	566	644
72	186	271	357	443	529	615	701
84	204	300	395	490	586	681	776
96	223	328	433	538	642	747	852
108	242	356	471	585	699	813	927
120	261	385	508	632	756	879	1,003
140	293	432	571	711	850	989	1,129
160	324	479	634	789	944	1,099	1,255
180	355	526	697	868	1,039	1,210	1,380
200	387	573	760	947	1,133	1,320	1,506

Grommet Panel - Price Group A

	50	75	100	125	150	175	200
24	162	262	363	463	563	664	764
30	182	292	402	512	622	732	843
36	201	321	441	561	681	801	921
45	231	366	500	635	770	904	1,039
54	260	410	559	709	858	1,008	1,157
63	290	454	618	782	947	1,111	1,275
72	319	498	677	856	1,035	1,214	1,393
84	359	557	756	955	1,153	1,352	1,550
96	398	616	835	1,053	1,271	1,489	1,708
108	437	675	913	1,151	1,389	1,627	1,865
120	477	734	992	1,249	1,507	1,765	2,022
140	542	833	1,123	1,413	1,704	1,994	2,284
160	608	931	1,254	1,577	1,900	2,223	2,546
180	673	1,029	1,385	1,741	2,097	2,453	2,808
200	739	1,127	1,516	1,905	2,293	2,682	3,071

Rod Pocket Panel - Price Group A

	50	75	100	125	150	175	200
24	178	278	379	479	579	679	780
30	198	308	418	528	638	748	858
36	217	337	457	577	697	817	937
45	247	381	516	651	786	920	1,055
54	276	426	575	725	874	1,023	1,173
63	306	470	634	798	962	1,127	1,291
72	335	514	693	872	1,051	1,230	1,409
84	375	573	772	970	1,169	1,367	1,566
96	414	632	850	1,069	1,287	1,505	1,723
108	453	691	929	1,167	1,405	1,643	1,881
120	492	750	1,008	1,265	1,523	1,780	2,038
140	558	848	1,139	1,429	1,719	2,010	2,300
160	624	947	1,270	1,593	1,916	2,239	2,562
180	689	1,045	1,401	1,757	2,113	2,468	2,824
200	755	1,143	1,532	1,920	2,309	2,698	3,086

Back Tab Panel - Price Group A

	50	75	100	125	150	175	200
24	175	275	375	476	576	676	776
30	194	304	415	525	635	745	855
36	214	334	454	574	694	814	934
45	244	378	513	648	782	917	1,052
54	273	422	572	721	871	1,020	1,170
63	302	467	631	795	959	1,123	1,288
72	332	511	690	869	1,048	1,227	1,406
84	371	570	768	967	1,166	1,364	1,563
96	411	629	847	1,065	1,284	1,502	1,720
108	450	688	926	1,164	1,402	1,639	1,877
120	489	747	1,004	1,262	1,520	1,777	2,035
140	555	845	1,135	1,426	1,716	2,006	2,297
160	620	943	1,266	1,590	1,913	2,236	2,559
180	686	1,042	1,398	1,753	2,109	2,465	2,821
200	751	1,140	1,529	1,917	2,306	2,695	3,083

Soft Cloth

Savvy Shade Fabrics by the Yard

	W	Price/ ln/yd	Lamp Shade	17" Cushions	Bed Runner Single/Double/King			Table Runner 12.5x71/90.5	
Botanica	88.5	109	195	100	295	375	415	195	255
Chenille	83	122	195	100	295	375	415	195	255
Collina	88.5	112	195	100	295	375	415	195	255
Marrakesh	86	58	195	100	295	375	415	195	255
Montana	92	122	195	100	295	375	415	195	255
Op. Linen	84	70	n/a	n/a	n/a	n/a	n/a	n/a	n/a
Papillon	86	96	195	100	295	375	415	195	255
Reg. Stripe	86	77	148	78	155	190	225	115	145
Sheer	84	46	n/a	n/a	n/a	n/a	n/a	n/a	n/a
Shot Silk	88	77	148	78	155	190	225	115	145
Taffeta	86	73	148	78	155	190	225	115	145

Caswell Fabric by the Yard

"A" Fabrics by the Yard..... 35
"B" Fabrics by the Yard 49
"C" Fabrics by the Yard..... 64
"D" Fabrics by the Yard 78
Standard Lining by the Yard..... 21
Thermal Lining by the Yard 28
Premium BO Lining by the Yard..... 39

Drapery Hardware

1-1/4" Metal Hardware

28 - 48" Rod with 2 Finials and 2 standard brackets 153
48 - 86" Rod with 2 Finials and 3 standard brackets 181
86 - 120" Rod with 2 Finials and 4 standard brackets 217
Rings with Clips (7) 53
C-Rings with Clips (7) 53
44" Extender Rod 75
5" Extension Bracket (each) 36
Double Bracket (each) 36

28 - 48" Rod with 2 brackets 85
48 - 86" Rod with 3 brackets 113
86 - 120" Rod with 4 brackets 149
Finials (pair) 68
End Caps (pair) 36

Bronze

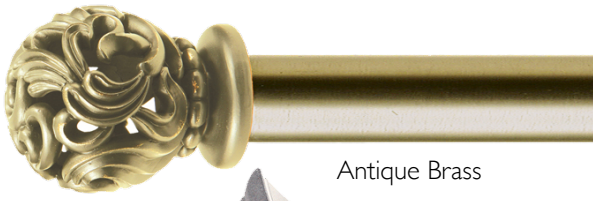

Antique Brass

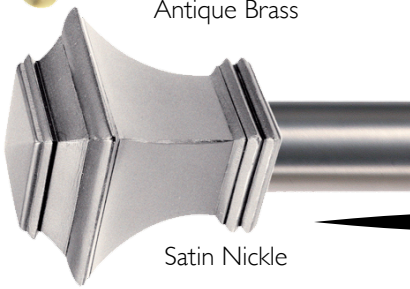

Satin Nickle

Double Bracket

End Cap

Clip Rings
Eyelet + clip adds 3" of length
Eyelet only adds 2" of length
(deduct 2" or 3" from the panel length accordingly)

Extension Bracket

Ball

Dover

Georgian

Square

Scroll

Pearl

Hampton

Glydea Motorized Drapery Track

Glydea 35 RTS - Budget Drapery Motor 1550
Glydea 60 RTS - 1800
One-way or Split Draw Pinch or Ripplefold 25/ft

DR1000 with IR Eye - Cord Puller Motor 1000

Clarksville Cornices

Wood Styles

The Flat Cornice (Partial Inside Mount)

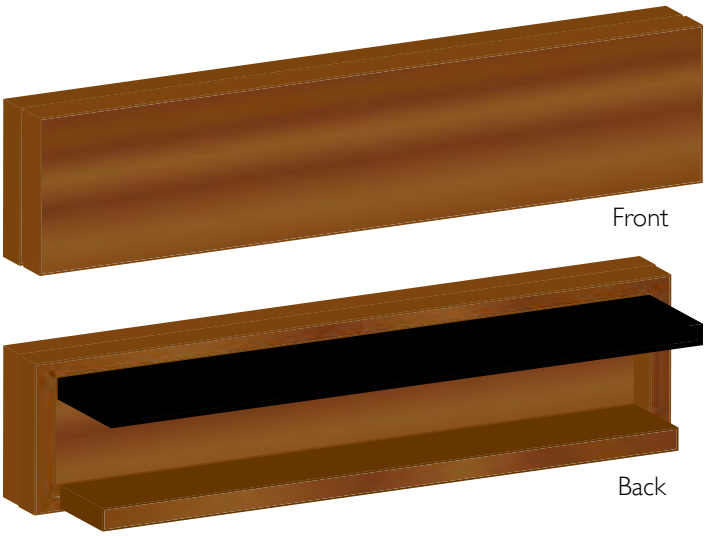

	Standard
Height*	4"
Projection forward into Room	1.5"
Projection back toward window	1"
Width	Window Width + 1.5"
Mount Type	Hang Strip
Species**	Poplar

*Custom heights above 5.5" subject to surcharge
**Alder: Add 20%, Oak: add 30%. Many other species are available and may be subject to surcharge

The Flat Cornice (Outside Mount)

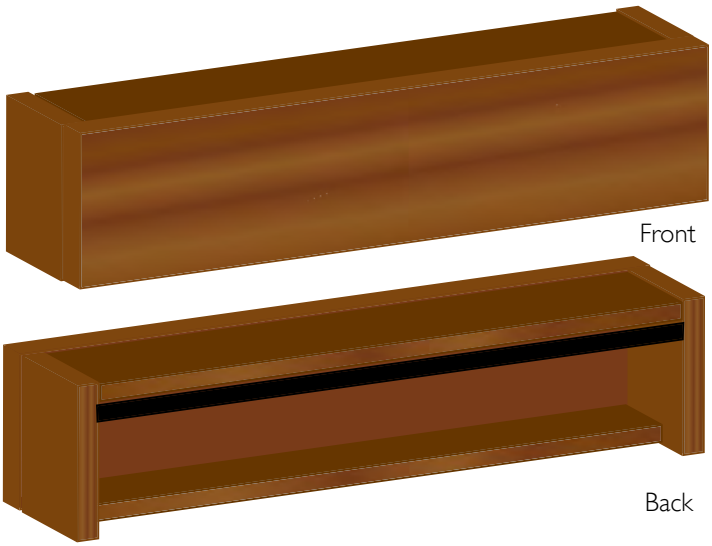

	Standard
Height*	4"
Projection forward into Room	4"
Projection back toward window	2"
Width	Product Width + 1.5"
Mount Type	Hang Strip
Species**	Poplar

*Custom heights above 5.5" subject to surcharge
**Alder: Add 20%, Oak: add 30%. Many other species are available and may be subject to surcharge

The Flat Cornice Modifcations

DecoMod

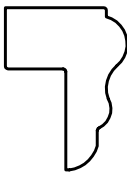

To add depth and decoration, we add a decorative trim on four sides. While there are countless decorative trims that can be chosen from a book of profiles, this profile accounts for a vast majority of decorative modifications. Please contact customer service for the book of profiles!

Craftsman

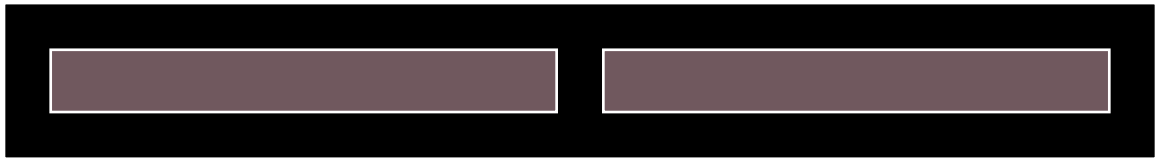

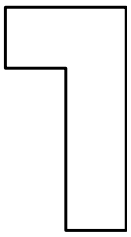

While the flat cornice is simple like the craftsman style, it's not exactly what the craftsman called for. This simple modification adds a profile around the edges of the flat cornice that makes the flat cornice more similar to that of the craftsman style. While it's not a true "raised panel" it does match the simple and sleek raised panels of years past. Standard Craftsman Style valances have no vertical center post, specify 1, 2 or 3 center posts and sapacing from left at time of order.

Custom Wood Valances

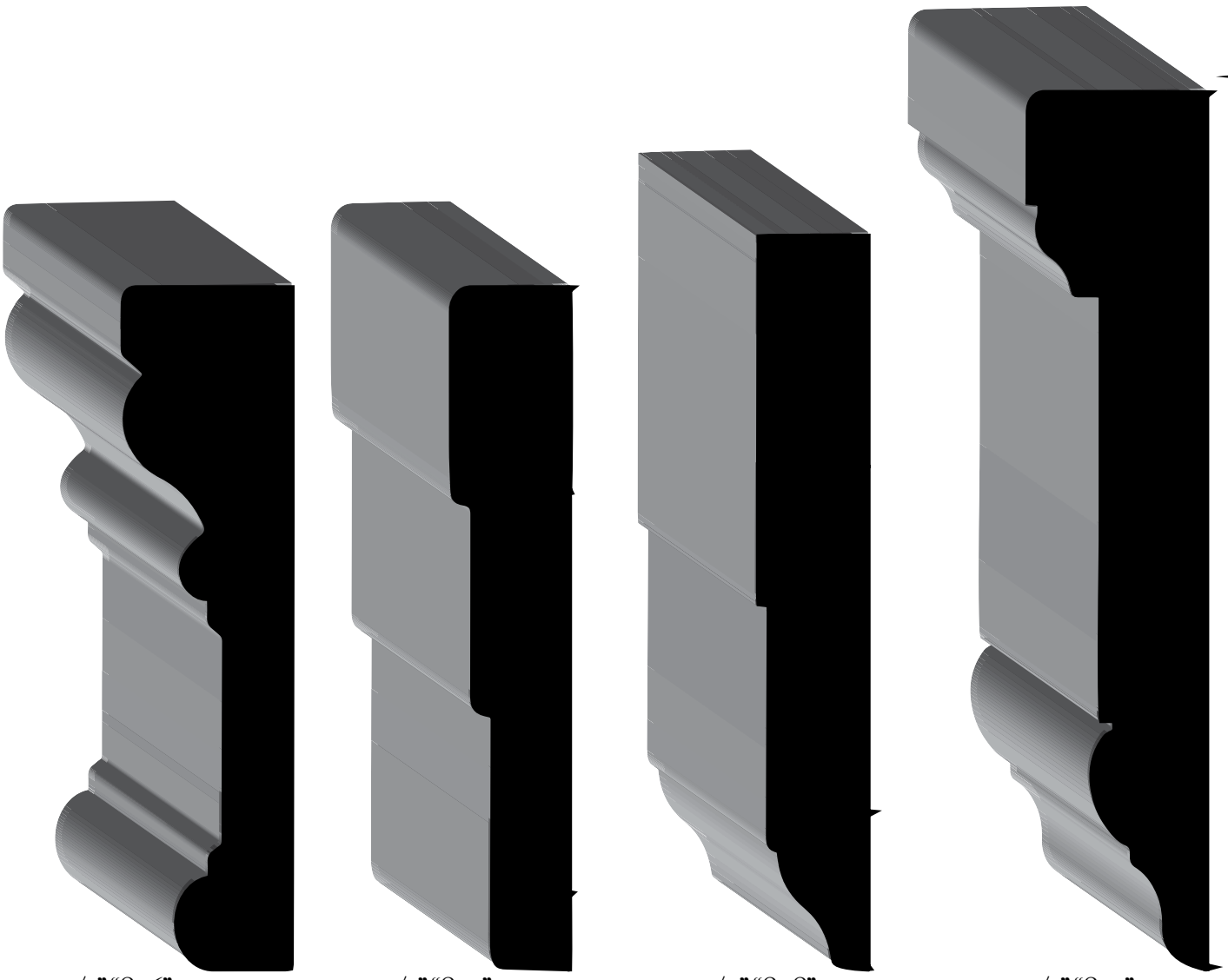

3-1/2" "826" 3-1/2" "839" 3-3/4" "898" 4-1/2" "895"

All Valances are custom painted or custom stained. Profiles are priced in Poplar OR Alder (Standard is Poplar, Alder must be specified at time of order, Alder is not recomended for painted valances.
All valances are expected to be installed with "L" brackets.

Wood Cornice Pricing

	25	37	49	61	73	85	97	109	121	133	145
Flat Cornice-Parital Inside Mount	83	123	163	203	243	283	323	363	403	443	483
Flat Cornice-Outside Mount	94	139	184	229	274	319	364	409	454	499	544
DecoMod	115	170	225	280	335	390	445	500	555	610	665
Craftsman Style	125	185	245	305	365	425	485	545	605	665	725
"826" or "897"	52	77	102	127	152	177	202	227	252	277	302
"898"	63	93	123	153	183	213	243	273	303	333	363
"895"	73	108	143	178	213	248	283	318	353	388	423

Fabric Styles

Upholstered Cornice Boards

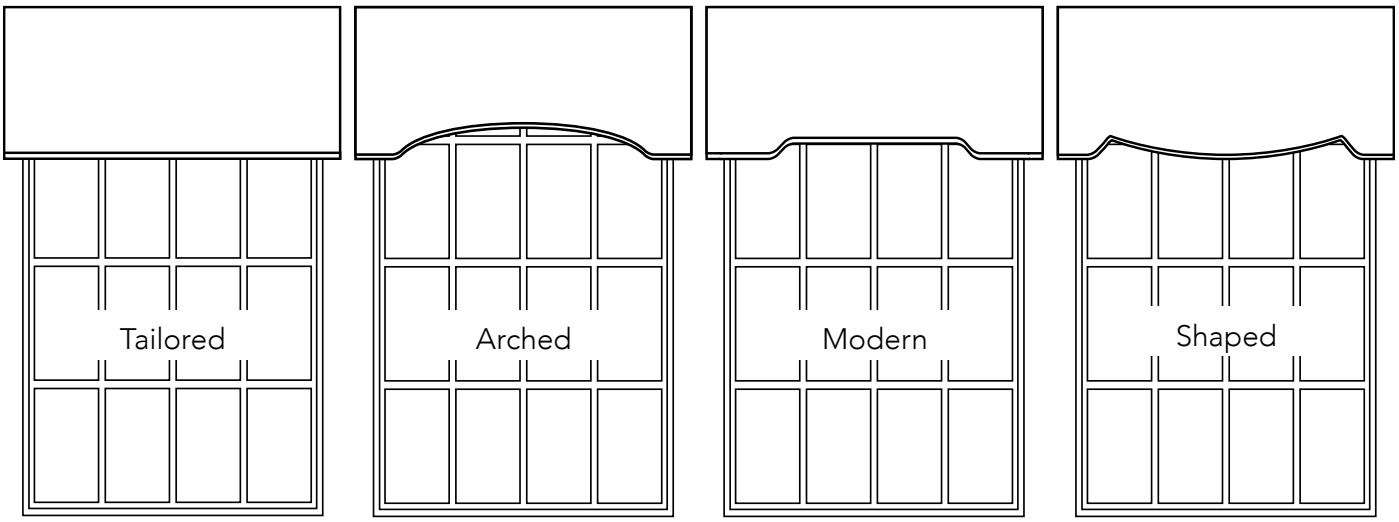

All upholstered cornice boards have either 4" or 7" returns and 12" or 16" lengths, seams above 52" in width (no fabric railroading), widths are above 72" will be hinged, bottoms are 1/2" self-corded.

Upholstered Cornice Boards - Price Group "A" Fabrics

Width>	30	42	54	66	78	90	108	120	132	144
All Styles	371	445	501	551	596	646	720	801	851	900
Fringe	39	49	53	56	60	71	78	81	88	95
Cord	32	32	35	35	39	39	46	49	53	56

Pole Mounted Valances

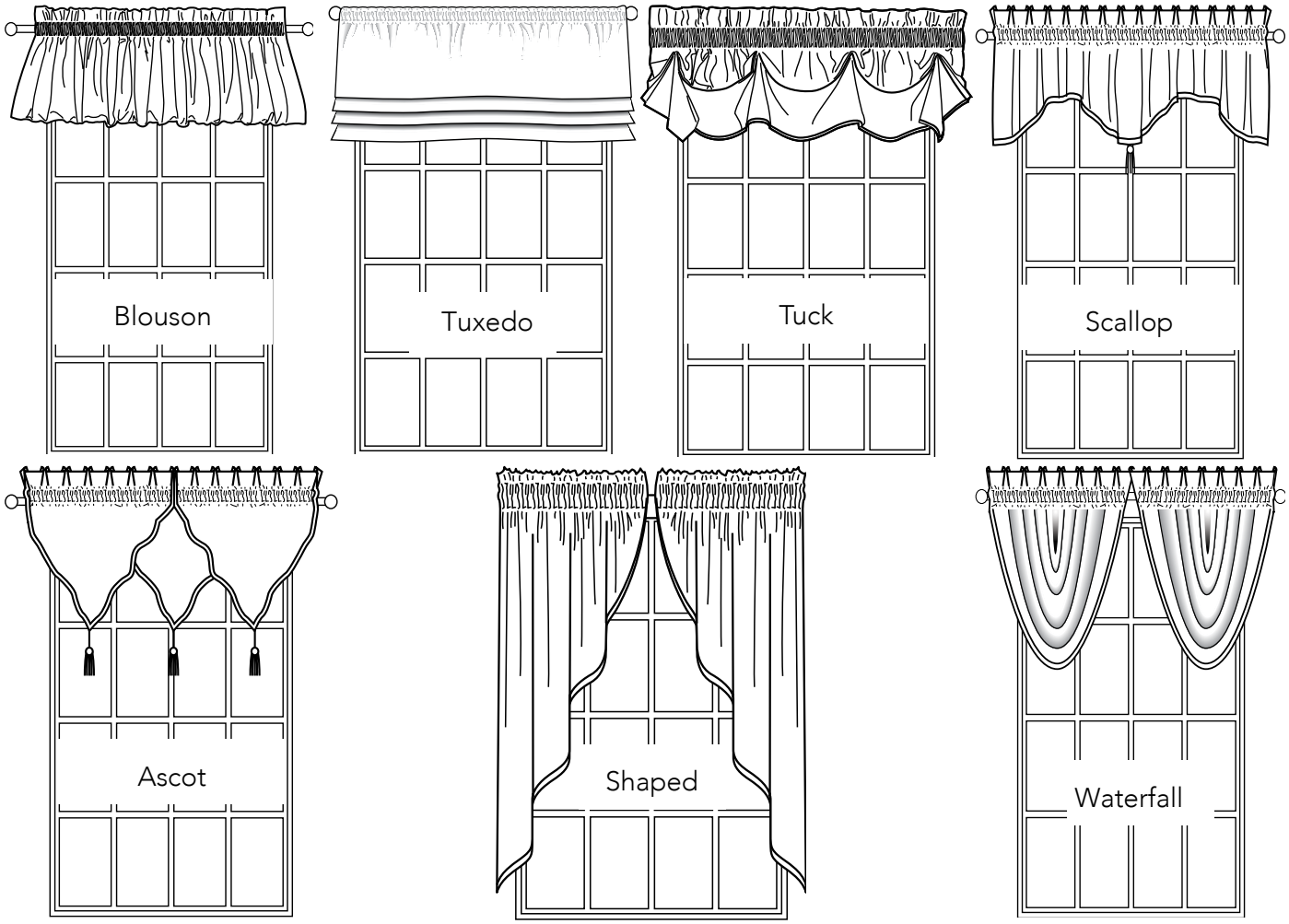

Pole Mounted Valances - Fixed Sizes - Price Group "A" Fabrics

Style	Size	Unlined	Self Lined
Waterfall	23 x 20"	159	
Tuck	78 x 14"	184	
Ascot	50 x 21"	127	
Scalloped	78 x 18"	159	
Double Scallop	78 x 15"	127	
Blouson	78 x 15"	109	
Scarf	144"	169	293
Scarf	216"	226	406
Shaped Valance	104 x 36"		205
Shaped Valance	104 x 63"		300
Shaped Valance	104 x 84"		378

Pole Mounted Valances - Precise Widths - Price Group "A" Fabrics

	Precise Width To Be Covered						
Width>	34	50	67	83	100	116	133
Tuxedo Pleat	$95	$124	$148	$173	$198	$229	$258
Width>	24	36	48	60	72	84	96
Tuck Valance US	159	180	205	265	293	325	364
Tuck Trim - Fringe or Cord	35	53	67	85	99	116	131
Blouson Valance US	152	176	205	258	289	321	360
Scalloped Valance US	141	159	169	226	247	275	304
Scalloped Valance Trim - Fringe or Cord	35	53	67	85	99	116	131
Double Scalloped Valance US	152	173	198	254	282	314	353

Pole Mounted Valance Details

	Ascot	Blouson	Shaped	Waterfall	Scalloped	Tuck	Tuxedo Pleat
Width	1 panel per 20"	Precise Widths	Sold as Pair @ 104"	68"x38" but Shirrs to 23" x 20". 1 panel per 23" of width	Precise Widths	Precise Widths	Precise Widths
Length	21"	15"	36", 63" or 84"	20"	18"	14"	18"
Solid/ Mix	Mix and match	Solid	Solid	Solid	Solid	Solid	Solid
Pole size	3/4", 1-1/4" OR 2-1/5"						3 Pocket, no header
Liner	None	None	None	None	None	None	None
Trims	Yes	None	Yes	Yes	Yes	Yes	None
Other Info		Tublar pocket can be stuffed for pouf or left flat	Sold as a pair, Use with Ascots or Waterfall or use alone				

Max 96" on precise widths

Board Mounted Valances

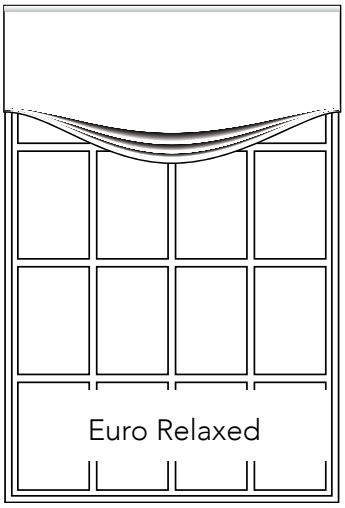

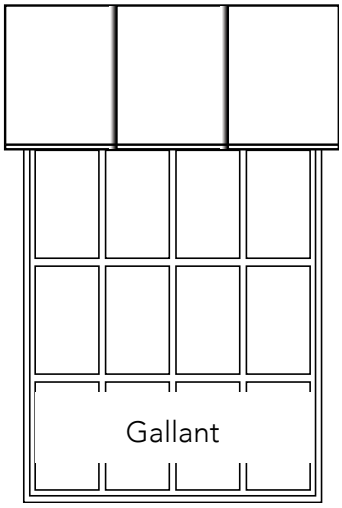

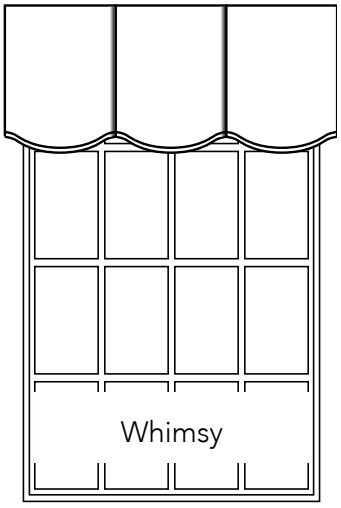

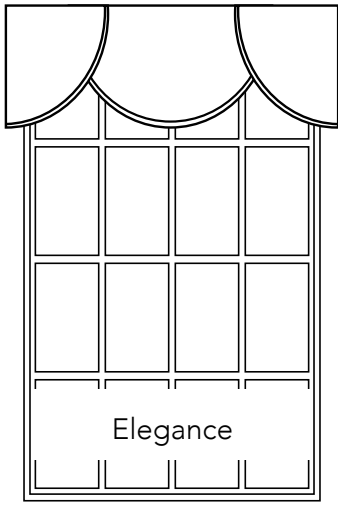

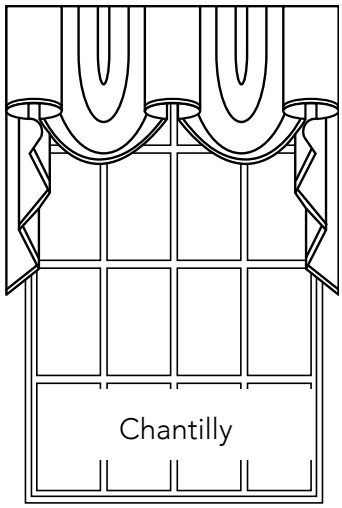

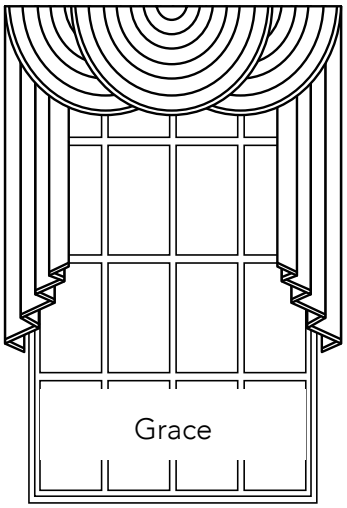

Mins: Swag 18", Jabot 12", Cascades 36"
Swags Standard, Cascades self Lined

Length: 18" or 22",
Cascades: 36", 63", 84" 96", 108"

Scoop/Pleat Chart

Width>	60"	90"	120"	144"	
Euro	1	2	3	4	
Width>	42"	66"	102"	126"	144"
Whimsy or Gallant	3	4	7	9	10
Width>	63"	90"	102"		
Elegance	3	5	7		
Width>	44"	66"	90"	138"	180"
Grace	1	2	3	5	7
Width>	50"	74"	98"	122"	146"
Chantilly Swags	2	3	4	5	6
Chantilly Jabots	3	4	5	6	7

Board Mounted Valance Details

	Chantilly	Elegance	Euro	Grace	Whimsy	Gallant
Returns	4" or 7"					
Liner	See Illustration		Standard Liner			
Trims	Yes		None		Yes	
Min Width	36"	48"	30"	30"	24"	24"
Max Width	146"	120"	144"	180"	144"	144"
Lengths	See Illustration	Min: 18"	Side: 14", Middle: 20"	See Illustration	18"	18"
Top Edge	1/2" Self Cord					

Board Mounted Valances - Price Group "A" Fabrics

Style: Elegance											
Width>	54	66	78	90	102	114	126	144			
Valance	395	484	547	589	702	745	815	918			
Fringe	71	95	95	127	127	148	148	169			
Cord	53	71	71	85	85	106	106	127			
Style: Gallant											
Width>	30	42	54	66	78	84	96	108	120	132	144
Valance	293	335	381	455	501	522	596	642	688	759	801
Fringe	49	60	64	74	85	85	88	99	106	124	127
Cord	39	49	53	56	64	64	71	78	88	95	99
Style: Whimsy											
Width>	30	42	54	66	78	84	96	108	120	132	144
Valance	293	335	381	455	501	522	596	642	688	759	801
Fringe	49	60	64	74	85	85	88	99	106	124	127
Cord	39	49	53	56	64	64	71	78	88	95	99
Style: Chantilly											
Width>	50	74	98	122	146						
Valance	674	851	1006	1182	1384						
Fringe	95	109	127	152	169						
Cord	71	85	102	120	134						
Style: Grace											
	Width>	44"	66"	90"	138"	180"					
Valance	36"	469	628	791	1112	1422					
	63"	565	720	886	1204	1511					
	84"	632	794	956	1278	1585					
	96"	674	836	999	1320	1627					
	108"	716	879	1038	1359	1669					
Fringe	36"	78	102	127	169	212					
	63"	88	109	134	180	226					
	84"	99	124	148	194	233					
	96"	106	131	155	201	247					
	108"	113	138	162	208	258					
Cord	36"	56	74	88	120	148					
	63"	64	81	99	127	152					
	84"	74	85	102	134	159					
	96"	78	88	106	138	162					
	108"	81	95	109	145	169					
Style: Euro Relaxed											
Width	60	90	120	150							
Number of scoops	1	2	3	4							
Valance	$487	$706	$872	$1,059							

Horizontals

Ventage™ Woods

Legends Woods

Venetian Aluminum

Frisco Faux

Austin Classic Mini Blinds

Horizontal Collection

	Ventage™ Woods	Legends Woods	Venetian Aluminum	Frisco Faux	Austin Classic Mini Blinds
Material	Cedar, Bass, & other authentic species	Bass Wood	10 Gauge Aluminum	Faux / PVC	6 Gauge or 8 Gauge Aluminum
Delivery Time	2 Weeks, 5 Day Surcharge Rush	Standard 5 Day, Free Same Day Rush on Select Colors			
Valance/ Clip/ Return	None or Wellington/ Hidden/ Glued	Standard Crown/ Wrap Around or Hidden/ Glued	Optional 2 Slat/ Wrap Around/ Bend Around	Standard Crown/ Wrap around or Hidden/ Glued	Optional 2 Slat/ Wrap Around/ Bend Around
Tassels	Antique Brass, Small or Large Coordinated	Color Coordinated Wood or Antique Brass (5% Surcharge)	Color Coordinated	Color Coordinated Faux	Color Coordinated
Options					
Privacy/No Holes	Standard	10% Surcharge	N/A	10% Surcharge	10% Surcharge
Control Options	>8", LR, RL, LL, RR	8" – 12" Center Tilt 121/8" – 24" LR, RL >241/8", LR, RL, LL, RR			> 7" Center Tilt > 10" LR, RL >12" LR,RL,LL, RR
Cloth Tape/ Deco Tape	Standard	15%/20%	15%/20%	30%/40%	N/A
Radius Corners	N/C Option	5% Surcharge	5% Surcharge	5% Surcharge	Standard
Wand Tilt	N/C - Downgrade to Steel HR Required	N/C Option	N/C Option	N/C Option	Standard (No Cord Tilt)
Accents/Striping	$125 Per Color	$75 Per Color			
Reverse and Single Sided Controls	Available N/C	Available N/C	Available N/C	Standard & Reverse Only	Available N/C
Ladder Spacing	44mm 42mm cloth tape	44mm 42mm cloth tape	44mm 42mm cloth tape	44mm 42mm cloth tape	21.5mm 18mm Privacy
Motorization	"Tilt Only" or "Lift & Tilt" Available (Downgrade to Steel HR Required)	"Tilt Only" or "Lift & Tilt" Available	"Tilt Only" or "Lift & Tilt" Available	"Tilt Only" or "Lift & Tilt" Available	N/A
End Route / Ladder Space	6″ / 24″	6″ / 24″	6″ / 24″	4″ / 10″	4″ / 23″
Min/Max Width	8″ / 107″	6″ / 107″	8″ / 136″	6″ / 107″	6″ / 142″

Venetian Aluminum & Frisco Faux

	24	30	36	42	48	54	60	66	78	84	96
30	80	90	101	111	122	133	143	154	175	185	207
36	83	95	106	118	129	141	152	164	187	198	221
42	87	100	112	124	137	149	162	174	199	212	236
48	91	104	118	131	144	158	171	184	211	225	251
54	95	109	123	137	152	166	180	195	223	238	266
60	98	114	129	144	159	174	190	205	235	251	281
66	102	118	134	151	167	183	199	215	248	264	296
72	106	123	140	157	174	191	208	225	260	277	311
78	110	128	146	164	182	200	218	236	272	290	326
84	113	132	151	170	189	208	227	246	284	303	341
90	117	137	157	177	197	216	236	256	296	316	356
96	121	142	162	183	204	225	246	266	308	329	371
102	124	146	168	190	211	233	255	277	320	342	385
108	128	151	174	196	219	242	264	287	332	355	400

Legends woods™

	24	30	36	42	48	54	60	66	78	84	96
30	98	113	128	143	158	173	188	203	233	248	278
36	105	121	138	155	171	188	205	221	255	271	305
42	111	130	148	166	184	203	221	239	276	294	331
48	118	138	158	178	198	218	238	258	297	317	357
54	124	146	168	189	211	232	254	276	319	340	384
60	131	154	178	201	224	247	271	294	340	364	410
66	138	163	187	212	237	262	287	312	362	387	436
72	144	171	197	224	250	277	303	330	383	410	463
78	151	179	207	235	264	292	320	348	405	433	489
84	157	187	217	247	277	307	336	366	426	456	515
90	164	195	227	258	290	321	353	384	447	479	542
96	171	204	237	270	303	336	369	402	469	502	568
102	177	212	247	281	316	351	386	421	490	525	594
108	184	220	257	293	329	366	402	439	512	548	621

Ventage™ woods

	24	30	36	42	48	54	60	66	78	84	96
36	166	187	209	231	251	275	296	318	351	371	389
48	181	206	232	257	281	308	334	360	400	424	449
60	196	225	254	284	311	342	372	401	449	477	509
72	211	244	277	310	341	376	409	442	498	529	569
84	226	263	299	336	371	410	447	484	547	582	629
96	241	281	322	363	401	444	484	525	596	635	689
108	256	300	345	389	432	478	522	566	645	687	750

Options

Wood & Faux Options

Arch DeLux Price as Square +....125
Common Valance >72".....25
Frisco Printed Stains &
Sand Blasted 10%
Molding Cutouts per side 50
Two on One 125
Distressed Wood 10%
Privacy PG30
Cloth Tape.....PG30

No Charge Options*

Extension Brackets .....N/C
Hold-Down Brackets .....N/C
Ring Tilt.....N/C
Side By Side .....N/C
Spacers .....N/C
Valance Returns.....N/C

Additional Austin Classic Options
All Above No Charge Options ...N/C
Pivot Plate.....N/C
Top Lock Cord Lock .....N/C
Channel Insert Valance.....N/C
Common Valance.....N/C
Two on One 125
Double Slatted Blinds.....50%

2" Motorization

Tilt only (Not Incl. Batteries) 250
Reloadable Battery Wand.....125
24VDC Transformer 125
24VDC 10A Transformer
Din Rail Mounted 375
Telis4 200
Telis4 Modulis (click wheel).....467
Tilt Only IR (w/ Batteries) 190

Austin Classic Mini Blinds

8Gauge Price List -

Deduct 5% for 6 Gauge — Add 10% for Privacy — Add 50% for Perforated

	25	37	49	61	73	85	97	109	121	133	145
37	72	89	105	122	139	156	172	189	206	222	239
49	78	97	117	136	156	175	195	214	234	253	273
61	84	106	128	151	173	195	217	240	262	284	307
73	89	115	140	165	190	215	240	265	290	315	340
85	95	123	151	179	207	235	263	290	318	346	374
97	101	132	162	193	224	254	285	316	346	377	408
109	107	140	174	207	241	274	308	341	375	408	442
121	113	149	185	221	258	294	330	367	403	439	475
133	119	158	197	236	275	314	353	392	431	470	509
145	124	166	208	250	292	334	375	417	459	501	543
157	130	175	219	264	309	353	398	443	487	532	576
169	136	183	231	278	326	373	421	468	515	563	610
181	142	192	242	292	343	393	443	493	544	594	644
193	148	201	254	307	360	413	466	519	572	625	678

DEDUCTIONS

	Product Dimensions	
Ordered:	HR	Slats & BR
IM	-5/8	-3/8
OB	-1/8	0

Parts

2" Horizontals

Valance Clips ..... 0.33 ea
Brackets ..... 2.36 pr
Headrail ..... 8.75 /ft
Valance ..... 2.91 /ft
Slat ..... 0.43 /ft
Bottom Rail ..... 2.12 /ft
Tilters ..... 4.71 ea
Cord Locks ..... 4.71 ea

1" Horizontals

Valance Clips ..... 3.77 ea
Brackets ..... 2.36 pr
Headrail ..... 2.38 ea
Valance ..... 0.15 /ft
6ga Slat ..... 0.13 /ft
8ga Slat ..... 0.15 /ft
Bottom Rail ..... 1.77 /ft
Tilters ..... 1.51 ea
Cord Locks ..... 2.36 ea
1.4 Cord ..... 0.21 /ft
1.8 Cord ..... 0.21 /ft
Ladder ..... 0.16 /ft
Wands ..... 1.30 /ft
Levolor Tilters ..... 6.50 ea

Roller Shades

Skyline Clutches:
SL5 ..... 14.92 ea
SL10 ..... 24.52 ea
SL15 ..... 41.09 ea
SL20 ..... 53.13 ea
R-Series Clutches
R8 ..... 47.06 ea
R16 ..... 58.83 ea
Galaxay Clutches
G200 ..... $62.60 ea
G400 ..... 127.06 ea
Narrow Brackets ..... 4.71 pr
Dual Brackets ..... 35.58 pr
Fascia Brackets ..... 12.16 pr
Tube < 2" ..... 5.45 /ft
Tube >2" ..... 28.24 /ft
Tube - Galvanized Exterior ..... 47.06 /ft

Minimum order size is $25

Shutter Warranty

Blind Supply LLC warrants to its dealers that its Wood Shutters used inside are free of manufacturing defects in factory materials or workmanship for as long as the product is owned by the original purchaser.

Full One Year Warranty:

Blind Supply additionally covers all damage or any repair needed for any reason.

Limited Lifetime Warranty:

Our Limited Lifetime Warranty covers all faulty workmanship or defective product for as long as the product is owned by the original purchaser.

Twentyfive Year Finish Warranty:

Our water reducible acrylic modified urethane system provides a durable finish is fully UV protected and warranted against fading. Some natural variation over time should be expected based on environmental conditions. Blind Supply cannot be responsible for cleaning or maintaining surface conditions in all environments.

General Terms and Conditions

Blind Supply's liability under this warranty is strictly and exclusively limited to the repair or replacement of defective parts. Blind Supply assumes no responsibility and shall not be liable to the original purchaser or any other party or non party for any personal injury loss, or damage, whether direct, liquidated, Incidental, or consequential, including but not limited to the labor or costs related to the replacement of a defective product or parts or Installation, re-installation, or removal of such product or parts, expense of returning a product or part to Blind Supply or its authorized dealer or the expense of delivering it back to the original purchaser, loss or damage to personal real property, loss of revenue, loss of the use of the product, loss of inconvenience repair or replacement under this warranty does not include labor. Costs for installation, re-installation, freight or removal of any products, components or parts. This warranty extends only to the original purchaser for Blind Supply products. No Claims will be accepted without the authorization of a Blind Supply representative.

This Warranty does not apply if any of the following exclusions exist:

1. The products have been subject to misuse, abuse, neglect, negligence, accident, or has been operated in any way contrary to reasonable operations.
2. Dye lots - color of dye lots may vary within commercial tolerance therefore the exact color as sampled in the product catalogs cannot be guaranteed. This applies to all product lines. Blind Supply cannot guarantee dye lots on subsequent or different orders.
3. Lighting variations: Please note that colors will vary with ambient lighting.

Exclusive Warranties

Making it Right! - Damage Repair

Your new window coverings are protected by Blind Supply's exclusive Making it Right! Warranty. This warranty covers **ANY** damage to your product during the first 12 months you own the product. Blind Supply will, at its discretion, repair or replace your blind or shade if it is damaged for any reason.

making it Right! - Replacement

If you choose, for any reason, to replace your blinds or shades in the next 10 years, Blind Supply will offer 20% off of your new order. Blinds must replace existing Blind Supply products and the original order must be returned for discount to be taken. Contact your window covering professional for more details.

Oops!

The Oops! Policy covers dealer error blinds only. If you make a mistake Blind Supply will remake the product and send it back to you. Once we receive the original product back, we will credit your account for 25% of the cost of the original. We know that mistakes happen and we don't expect to profit from your mistake.
Note: Blinds not returned to Blind Supply within 30 days will not qualify for 25% credit. Oops! Policy applies to fabricated products only.

Return Policy

Products returned for any reason need to be accompanied by a Return Authorization Number (RA#) to assure prompt processing. To receive an RA #, please call Blind Supply's Customer Service Department. Blind Supply will not assume responsibility for blinds sent in without an RA#. Please mark the outside of the box with the RA#. Blind Supply will arrange a pick up for warranty work if product is less than 12 months old, at no expense to you.

Freight Damage Policy

Your product will be repaired or replaced if a successful freight claim is submitted.
Visible Damage = Please sign for the package as damaged. Be sure to bring the damage to the attention of the delivery driver.
Concealed Damage = Contents can be damaged without obvious damage to the box. You should always open your packages when received in case of concealed damage before installation day. We know it is inconvenient, but please do it. Freight carriers will not accept claims after 15 days.
Lost Package = A lost package is considered damaged.
To initiate a successful freight claim:
1. Find the tracking number of the box containing damaged goods (usually on the shipping label)
2. Notify the freight carrier of the damage. You will need the tracking number at this time. The carrier will only make note of the damage for their records.
3. Once the freight carrier has been notified, contact Blind Supply's Customer Service Department. You will need your invoice number, tracking number and a description of the package. Customer service will schedule a remake or repair and Blind Supply will file the freight claim.
4. Freight carriers often require a representative to inspect packaging and contents. To ensure the claim is paid, you must keep the damaged product along with the packaging until you are notified by the freight carrier to discard the items.

All freight claims must be filed with Blind Supply within 15 days of the original ship date.

Oversize Freight Policy

Shades exceeding 102" in width that must travel via LTL Freight Carrier will incur an oversized freight charge of $175 per shade with a maximum of $1250 per order.

WARRANTY DETAILS

Limited Lifetime Warranty

Our Limited Lifetime Warranty covers your new blinds, shades & shutters for as long as you, the original purchaser, owns the product. This covers ALL manufacturing and workmanship defects, forever.

✓ Covered

Any manufacturing defect as long as you own the product
Ordinary wear and tear up to...

Cords	3 years
Slats	5 years
PVC Vertical Vanes	5 years
All Fabric	3 years
Vertical tracks	20 years
Ladders	5 years
Tilt and Lift Mechanisms	5 years
Motors	5 years

☒ Not Covered

Normal wear and tear including but not limited to the following:
Discoloration due to sunlight, yellowing or cracking of plastic parts or faux wood products, loss of pleating, warping, cracking or any other damage caused by high-humidity applications
Damage caused by:

- Accidents
- Improper installation
- Alterations
- Cleaning
- Damage caused by animals or insects
- Improper Operation
- Water Damage
- Extraordinary Use
- Abuse
- Exposure to Salt Air
- Misuse
- Misapplication

General Terms and Conditions

Blind Supply's liability under this warranty is strictly and exclusively limited to the repair or replacement of defective parts. Blind Supply assumes no responsibility beyond the strict limits of this Warranty. Blind Supply is not liable to the original purchaser or any other party or non party for any personal injury loss, or damage, whether direct, liquidated, Incidental, or consequential, including but not limited to the labor or costs related to the replacement of a defective product or parts or installation, re-installation, or removal of such product or parts, expense of returning a product or part to Blind Supply or its authorized dealer or the expense of delivering it back to the original purchaser, loss or damage to personal real property, loss of revenue, loss of the use of the product, loss of inconvenience repair or replacement under this warranty does not include labor, costs for installation, re-installation, freight or removal of any products, components or parts. This warranty extends only to the original purchaser for Blind Supply products in the original installation location. No Claims will be accepted without the authorization of a Blind Supply representative.

This Warranty does not apply if any of the following exclusions exist:
1. The products have been subject to misuse, abuse, neglect, negligence, accident, or has been operated in any way contrary to reasonable operations.
2. Dye lots - color of dye lots may vary within commercial tolerance therefore the exact color as sampled in the product catalogs cannot be guaranteed. This applies to all product lines. Blind Supply cannot guarantee dye lots on subsequent or different orders.
3. Lighting variations: Please note that colors will vary with ambient lighting.

THIS WARRANTY IS EXCLUSIVE AND IN LIEU OF ALL OTHER OBLIGATIONS, LIABILITIES OR WARRANTIES. In no event shall Blind Supply be liable or responsible for INCIDENTAL OR CONSEQUENTIAL DAMAGES, including costs associated with product removal, trips to or from product destination, product Installation, shipping or transportation or for any other direct or indirect damage, loss, cost, expense or fee. Some states do not allow the exclusion or limitation of incidental or consequential damages, so this exclusion or limitation may not apply to you. This warranty gives you specific legal rights, and you may also have other rights which vary from state to state.

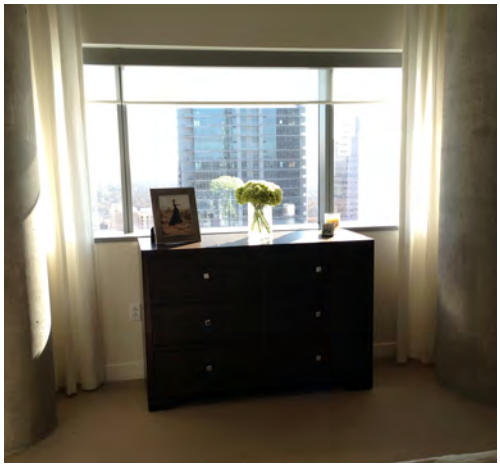

blind SUPPLY

BOUTIQUE
WHOLESALE
WINDOW
COVERING
FABRICATION

3920 Gattis School Rd, Suite 112
Round Rock, Texas 78664

800.999.5444 / 512.835.5333
FAX: 512.835.5593

WWW.BLIND-SUPPLY.COM WWW.SAVVY-SHADES.COM WWW.SAVVY-SHUTTERS.COM

Order Entry:
800.999.5333 / 512.835.5334
Fax: 800.999.5555

To The Trade Only